CASS CITY CHRONICLE

VOLUME 35, NUMBER 13. CASS CITY, MICHIGAN, FRIDAY, JUNE 21, 1940. EIGHT PAGES.

New Turbine Will Effect Saving in Pumping Costs

Village Council Adopted 1940 Budget Monday; Tax Rate Is Set at 12 Mills.

Village Engineer Cecil U. Brown told members of the village council in session Monday evening that the Peerless deep well turbine at the municipal water works plant on which the installation was completed on May 27, was saving the village an estimated $30 per month on the cost of pumping water. During the three weeks it had been in operation it had raised 1,300,800 gallons of water, consuming 1,265 kilowatt hours of electrical energy. The pump lifted 1,000 gallons of water at a cost of ninety-one one hundredths kilowatt hour. The new pump has an efficiency of 65% whereas that of the old equipment was 42%.

The new pump is located 50 feet below the surface of the street, is operated by a 15 horse power vertical electric motor and delivers 270 gallons of water a minute to the village water system. The turbine pumps water from an eight-inch well on the north side of the street from the power house and will be enclosed in a brick building 10 by 11½ feet in size. The foundation walls for the new building have been poured.

The electrical pump and the reserve pump operated by a gasoline engine which have supplied the water system in the past will be connected to two six-inch wells which were drilled in 1913 but have not been in use since 1925 when the first electrical pump was installed. The connections will be completed this week for these reserve units.

The growth of the list of water patrons and the consequent increased demand for water rendered the old system inadequate for present day needs. The Peerless deep well turbine has doubled the pumping capacity at the waterworks plant for both fire protection and domestic use.

At Monday night's session of the council, a proposed budget was adopted. It calls for an expenditure of $17,121 for the coming year. Other items outside of the new waterworks pump which call for the larger amounts of expenditure are light and power, waterworks labor and supplies, bonds and interest, improving village streets with black top and village engineer's salary.

Under the estimated receipts are $3,360.83 from Horton Act funds from the state which must be used exclusively in retiring highway bonds and paying their interest, and in maintaining and improving village streets. As the second last village paving bond will be paid in 1940, this will leave a neat sum from Horton funds to be expended on village streets this year, and after 1941, with no bonds to be paid from this fund, the amounts for street improvements will undoubtedly be larger. For this reason, the village council plans for a program of blacktopping village streets over a period of several years and starting work this summer.

The amount to be raised by direct tax this year is $9,205.80. This will necessitate a tax rate of 12 mills, the same as that of 1938, and two mills higher than last year.

The following is the proposed

Turn to page 4, please.

Two Farmers Dead Following Strokes

John Highstreet of Wisner Township, who lived alone, was found dead in his home Saturday noon. He had been working in the field Friday morning and had taken his team to the barn at noon, leaving the harness on his horses. He was evidently the victim of a stroke.

Julius Kreger, 47, was drawing hay on his farm near Mayville when he suffered a stroke. He was found by his wife lying on the ground Saturday afternoon.

Farmer, Sitting on Porch, Hit by Truck

When Socono Jiminez 14, turned into the driveway of the Louis Cisnews farm, 7½ miles northwest of Fairgrove, on June 13, he attempted to turn the truck in front of the house, but losing control of the machine, it struck Mr. Cisnews, breaking one of his legs. He was taken to a Bay City Hospital for treatment. Mr. Cisnews was sitting on the edge of the porch when the accident occurred.

New Rotary President Takes Office July 1

Robert Keppen

who was elected president of the Cass City Rotary Club several weeks ago, enters into his new duties on July 1, the beginning of the club year. He has announced the members of the club's committees, a list of them appearing in this number of the Chronicle.

Saginaw Bay Bible Conference Meets July 8-22

A rally in interest of the Saginaw Bay Bible Conference will be held in the First Baptist Church of Cass City on Friday, June 21, at 7:30 p. m.

The Rev. Arthur H. Hottel, assistant pastor of the Calvary Baptist Church of Hazel Park, will conduct the song service and also play on his piano accordion. The speaker of the evening will be the Rev. W. S. Colgrove, pastor of the First Baptist Church, Rochester.

The Saginaw Bay Bible Conference will hold its sixth annual conference, July 8 to 22, at the Bay Shore conference grounds at Sebewaing. Many nationally known and outstanding preachers and teachers will be the speakers during this interesting two-week conference, among whom are Will H. Houghton, president Moody Bible Institute; Earl G. Griffith, Johnson City, N. Y.; W. S. Hottel, Detroit; H. H. Savage, Pontiac; Vance Havner, Charleston, S. C.; John E. Zoller, Detroit; and William Headley, Gary, Indiana. The music will be under the direction of Edmund Keith, Bay City.

Pretty Wedding at Kinnaird Home

In a pretty wedding at noon Wednesday, June 19, in the home of Mr. and Mrs. Audley Kinnaird on West Main Street, Cass City, Miss Mary Ellen Kastraba was united in marriage with Grant W. Hutchinson, son of Mr. and Mrs. Frank Hutchinson, of this place.

Rev. Henry G. Bushong, pastor of the Methodist Church, officiated at the ceremony in the presence of the immediate families.

The bride was very pretty in a street length, tailor made jacket dress of white sharkskin, trimmed in blue, and buttoned down the front. She wore white accessories and carried an arm bouquet of white peonies.

Miss Anna Kastraba of Cass City was her sister's maid of honor and wore a street length dress of brown and white Bemberg sheer with white collar and white accessories.

Louis McGrath, also of Cass City, attended Mr. Hutchinson as best man.

A luncheon followed the wedding, Carol Heller and Frances Cranick serving. The Kinnaird home was very pretty with baskets of cut flowers.

Mr. and Mrs. Hutchinson left to spend a few days in the Upper Peninsula and will then make their home in the apartment on the second floor of the Kerbyson house, corner of Leach and Church Streets.

The bride is a member of the Class of '39 to graduate from Cass City High School and made her home with the Kinnairds for some time. The last year she has been employed in the home of Mr. Maquire at Grosse Pointe Woods. Mr. Hutchinson is also a graduate of Cass City High School of the Class of 1938 and is employed at the West Welding and Machine Shop.

Leg Broken in Fall from Motorcycle

Harve Klinkman had the misfortune to fall from a motorcycle, breaking the left leg between the ankle and knee. He was taken to Pleasant Home Hospital but expects to go home the last of the week.

Keppen Appoints Rotary Groups for Coming Year

Newly Elected Officers Take Their Positions in Club on July 1.

Robert L. Keppen, recently elected president of the Cass City Rotary Club, who assumes the duties of this office on July 1, on Tuesday announced the appointments of Rotary committees for the coming year: They are:

Aims and Objects Committee—L. I. Wood, Fred Pinney, Walt Mann, Leslie Townsend, Frank Reid, Robert Keppen, F. A. Bigelow.

Vocational Service Committee—Frank Reid, chairman; M. C. McLellan, H. Doerr.

International Service—Fred Pinney, chairman; H. F. Lenzner, J. I. Niergarth.

Community Service—W. L. Mann, chairman. Boys' Work—W. L. Mann, Curtis Hunt, E. L. Schwaderer. Rural Acquaintance—A. Rawson, G. A. Tindale. Crippled Children—W. Campbell, Dr. H. T. Donahue. Playground—R. Keppen, E. B. Schwaderer, E. L. Schwaderer, A. T. Barnes.

Club Service—L. I. Wood, chairman. Membership and Attendance—L. I. Wood, M. B. Auten, J. A. Sandham. Music—George Dillman. Rotary Information—Otto Prieskorn.

Club Programs—Fred Bigelow, chairman.

Sergeant-at-Arms—Leslie Townsend.

Officers of the Rotary Club are: President, Robert Keppen; vice

Turn to page 8, please.

New Bridge on M-85 Across Cass River

Construction of a new bridge across the Cass River on Highway M-85 in the village of Caro, Tuscola County, is included among projects which the State Highway Department has programmed for this year, it is announced. Cost of the new bridge and about half a mile of concrete pavement approaches is estimated at $130,000.

"The project is one of more than 50, estimated to cost a total of $5,556,688, on which we plan to proceed this year," State Highway Commissioner Murray D. VanWagoner said. "These projects will be financed by Federal Aid and gas tax funds."

The present bridge on M-85 at Caro is an old, high truss, narrow affair on bad alignment. The new bridge will be located east of the old one where the road can be straightened out.

Highway planning surveys in Michigan show 201 trunkline bridges less than the minimum safe width of 20 feet.

Construction by the State Highway Department in Michigan this year is of vital character. It includes the elimination of many existing highway inadequacies and hazards.

Four from Tuscola Co. Get Degrees from the U. of M.

Of the more than 2,100 students who received degrees at the University of Michigan's 96th annual commencement exercises on June 15, four are from Tuscola County. They are:

Caro—Paul R. Park, Bachelor of Arts; Elizabeth G. French, Bachelor of Science in Education.

Cass City—Phyllis M. Lenzner, Master of Arts.

Mayville—Fleming A. Barbour, Master of Science.

Unanimous Call for Return of Local Nazarene Minister

At a meeting of members of the Nazarene Church in Cass City on Saturday night, Stanton Marsh was elected Sunday School superintendent; Mrs. George Bugbee, young people's president; and Miss Florence Coulter, superintendent of cradle roll. Reports showed the membership of the school had tripled.

The pastor, Rev. George D. Bugbee, received a unanimous call to return for the coming year. During his brief ministry here, the church has been remodeled and seats replaced.

A dedicatory service will be held Sunday, June 30, with Rev. R. V. Starr, district superintendent, presiding.

Schiestel-Wheeler Nuptials Tuesday

St. Ignatius Catholic Church at Freiburger was the scene of a pretty wedding Tuesday morning, June 18, when Miss Marie Schiestel, daughter of Mr. and Mrs. Clemen Schiestel, of Tyre, became the bride of Vern Wheeler of Snover. The Rev. Fr. Joseph Dudek read the service at 9:30 o'clock before a gathering of fifty relatives and friends. The church was lovely with ferns and bouquets of peonies and iris.

The bride wore a gown of white silk lace over satin with floor length circular veil and carried a shower bouquet of white roses tied with tulle and white satin ribbons.

Miss Marjorie Peters of Tyre, the bride's only attendant, wore a floor length dress of pink lace over pink taffeta with pink taffeta jacket and a coronet of pink carnations in her hair. She carried an arm bouquet of pink carnations and white roses.

Hudson McPhail of Tyre assisted Mr. Wheeler as best man.

Following the wedding a breakfast was served to forty guests in the home of the bride's parents.

About 300 attended a reception in honor of Mr. and Mrs. Wheeler held that evening in the Argyle hall.

Mr. and Mrs. Wheeler will make their home in Cumber, having taken over the management of the Cumber General Store.

Miss Marjorie Peters entertained at a miscellaneous shower in honor of Miss Schiestel Friday evening.

Three Highway Projects in the Thumb of Mich.

State Highway Dept. Announces Low Bids on Jobs in Four Counties.

The Michigan State Highway Department opened bids last week on 16 highway construction projects on the state highway system. Of these three are located in the Thumb of Michigan. These three projects and the low bidders are:

Huron County—0.796 miles of grading and drainage structures and water bound macadam on M-25 and M-32 in the Village of Sebewaing, Taylor Bros., Inc., Birmingham, $13,832.

Lapeer and Tuscola Counties—16.493 miles of oil aggregate surfacing on M-24, north of Mayville, Oxford Asphalt and Equipment Company, Oxford, $75,287.

Sanilac County—Bridge of special twin 10-ft. by 12-ft. box type structure on US-25, north of Port Sanilac, J. H. Baker & Son, Port Huron, $15,796.

Two Drown in Cass River near Caro within Three Hours

A nine-year-old boy of Caro and a young man patient of the Caro State Hospital for Epileptics were drowned in the Cass River Friday within three hours of one another.

James, son of Mr. and Mrs. Thomas Cockerell, waded into the river at the rear of the Michigan Sugar Company's factory and was swept into 12 feet of water. His younger brother, William, eight years of age, was hauled from the river by Adam Schnur.

Schnur saw the older boy drown as Schnur was crossing the sugar factory tramway over the river and hurried to the rescue of the younger lad.

Grappling irons failed to secure the body of James Cockerell because the lad was unclothed. The body was recovered by Gordon Dudley, factory chemist, who dived into the stream. Artificial respiration was applied for more than an hour without success. The boy leaves besides his parents, four sisters and two brothers.

Eugene Cyran, 21, a patient at the state hospital, climbed through a fence, walked into the river and fell in four feet of water. Because of his weakened condition, he could not arise. His body was recoverede a half hour later by Dr. W. W. Dickerson, assistant superintendent of the hospital, about a quarter of a mile down stream.

Miss Joanna McRae, who has been employed in Detroit for several months, returned to her home in Cass City Saturday.

Office Closed Thursday Afternoons.

Dr. P. A. Schenck's dental office will be closed on Thursday afternoons during the summer months. —Advertisement-tf.

Youth Start Summer Fun at Municipal Park

Two Free Periods Each Week Day Finds Many Children Swimming.

"Hi, Skinny, we're going down to the pool!"

This expression and many like it are heard every day in Cass City among the younger generation since the warm summer period was ushered in the past week. The Cass City Municipal Swimming Pool is again the center of attraction and is patronized by many.

While youngsters were admitted for short periods Thursday and Saturday afternoons, the pool was officially opened on Saturday, the day after school closed. One hundred fifteen of school age enjoyed the pleasures of the pool during the free periods Monday and at least 100 were present on Tuesday. As the season advances the attendance will naturally increase. Last season, the largest "free" attendance came on June 28 when 190 children were in the pool during the morning and afternoon hours.

The hours of operation this season are from 9:00 a. m. to 12:00 m., from 2:00 to 6:00 p. m., and from 7:00 to 10:00 p. m. on week days. On Sunday, the pool is open from 2:00 to 6:00 p. m.

Children who attend grade or high school are admitted free on week days from 9:00 a. m. to 12:00 m., and from 2:00 to 4:00 p. m. At all other times an admission charge of 10 cents is made for each child. The admission price for an adult is 20 cents at all times. Season memberships are obtainable for both adults and children.

Turn to page 8, please.

Soil Conservation Tour of Tuscola Co. Farmers Organized

Tuscola County farmers interested in soil erosion control, AAA committeemen, township supervisors, soils conservation service technicians from the Kingston CCC Camp, will leave the Tuscola County Court House at 7:00 a. m., Thursday, June 27, to begin their trip to the Howell Erosion Control Area.

Ten townships in Tuscola County are subject to a considerable degree of water erosion. Farmers operating rolling farms in any of these townships should be particularly interested in this tour, says County Agricultural Agent Norris W. Wilber. Arbela, Millington, Watertown, Fremont, Dayton, Koylton, Kingston, Elkland, Ellington and Almer Townships are the ones most seriously affected.

Proper crop rotations which provide an abundance of legume and sod crops and the retirement of land to permanent meadow which is too hilly for cultivation will be observed on the tour. Pasture mixtures of alfalfa and smooth brome grass is also being successfully used in the district. Strip-cropping, contour farming and terracing are also in practice in the Howell area.

Another interesting feature of the tour will be the observation of the soil run-off plots near Fenton. Here the actual amounts of soil and water lost by erosion per inch of rainfall is measured. It is interesting and significant to note that after a 2-inch rainfall which occurred in one day last summer there was 1,800 times as much soil lost on a 7% slope with a crop of corn, rows running up and down the slope, as was lost on the same slope planted to alfalfa-brome grass meadow.

Norris W. Wilber is in charge of the tour until the party arrives at Howell where S. B. Thomas, county agricultural agent of Livingston County, will take over.

Anyone interested in this tour is invited to go.

Fewer Farms in 3 Thumb Counties than Five Years Ago

The 1940 agricultural census in the three Upper Thumb counties reveals there are 494 fewer farms in that area than five years ago. The 1940 number, however, is greater by 603 than the 1930 total.

Here are the figures of 1940 just released by Paul S. Baldwin, supervisor of census, and the totals of 1935 and 1930.

	1940	1935	1930
Tuscola	4,648	4,867	4,459
Huron	4,175	4,393	4,155
Sanilac	4,983	5,040	4,589
Total	13,806	14,300	13,203

Will Marry Alma Graduate June 28

Miss Phyllis Ann Koepfgen.

Mr. and Mrs. Lyle A. Koepfgen of Cass City have announced the approaching marriage of their daughter, Phyllis Ann, and Mr. William Dunnette, Jr., of Grand Rapids. The ceremony will be performed in the garden of the Koepfgen farm home on Friday, June 28.

Miss Koepfgen was graduated from the Cass City High School in 1938. She has just completed her sophomore year in Alma College and is a member of the Kappa Iota Sorority. She will continue her studies at Alma College next year.

William Dunnette, son of Mr. and Mrs. William Dunnette, Sr., of Grand Rapids, was graduated from Alma College last year and is employed as a chemist by the Mid-West Refineries in Alma. He is a member of the Phi Phi Alpha fraternity.

Where Cass City Teachers Will Spend Summer Vacations

J. I. Niergarth, Willis Campbell, Arthur Holmberg, Orion Cardew, Arthur Hesburn, Mrs. C. W. Price, Mrs. Eva Marble, Mrs. Mary Holcomb, Mrs. Zora Day and Lester Ross will spend most of the time in Cass City. A number are planning short trips.

Miss Elizabeth Coons will be at Ironwood, Miss Doris Boersma and Miss Ruth Schenck at Mt. Pleasant, and Miss Florence Rosenow at her home in Ludington. Daniel Kroll will attend the University of Michigan at Ann Arbor and J. Wesley Dunn, Columbia University in New York City.

Miss Edith Carlin will spend the summer at Warren, Pa., and will take a trip to Washington, D. C. Miss Verna Bailey and Miss Verda Zuschnitt will spend a part of the summer in Cass City. With Miss Janet Davidson of Deckerville and Miss Pauline Reed of Indiana, they will leave July 15 for Yellowstone Park and other places of interest in the West. Miss Marion Deabler will spend the summer at Woodland, Marcellus and at Naperville, Illinois.

X-Ray Clinic at Vassar High School on Monday, June 24

A Tuberculin test is urged for Tuscola County residents before the X-Ray clinic is held at the Vassar High School on June 24, from 9:00 to 12:00 a. m., according to Clarence Cole, field representative from the Michigan Tuberculosis Association. All persons may obtain the test from their family doctors.

Positive reactors to the tuberculin test will be X-rayed by the association on June 24, Mr. Cole announced. This test is used to indicate whether or not the person has ever harbored tuberculosis germs in his body. An X-ray then determines whether or not any damage has been done to lung tissues.

Because tuberculosis is spread only from person to person, anyone who has ever come in contact with tuberculosis is urged to obtain a tuberculin test. It is sometimes dangerous for such "contacts" to wait until they are not feeling well to have a check-up, for there are no symptoms in early tuberculosis. Yet the patient, who discovers he has tuberculosis in the early stages can be cured in a much shorter period of time, and at a great saving of money over the person who does not begin treatment until he is seriously ill.

All phases of the Michigan Tuberculosis Association's health programs are financed by the sale of tuberculosis Christmas Seals.

Wolverine Work Shoes

at Prieskorn's at $2.39 a pair.—Advertisement.

23 Teachers for Local School Sign Contracts

Six New Instructors Are Included in Next Year's Staff.

At a meeting of the board of education of the Cass City Public Schools on May 13, contracts were voted for six new instructors for the coming year. All of these have accepted the positions and now all of the 23 positions on the teaching staff are filled.

The following is the list of instructors for the coming year:

J. I. Niergarth, superintendent.
Willis Campbell, principal and agriculture.
Verda Zuschnitt, commerce.
Orion Cardew, industrial arts.
Arthur Holmberg, science.
Daniel Kroll, literature and speech.
J. Wesley Dunn, mathematics.
Lester Ross, government and coach.
Charles Keen, music.
Verna Bailey, home economics.
Edith Carlin, history and French.
Eleanor Cotton, English 10 and Latin.
Marjory Wallingford, English 9 and biology.
Mary Holcomb, junior high principal.
Elizabeth Coons, bookkeeping and mathematics.
Dave Ackerman, 6th grade.
Ruth Richards, 5th grade.
Ella Price, 4th grade.
May Belle Clara, 3rd grade.
Florence Rosenow, 2nd grade.
Caroline Garety, 1st and 2nd grades.
Zora Day, 1st grade.
Ruth Schenck, kindergarten and art.

In the list of new instructors are Charles Keen, Eleanor Cotton, Marjory Wallingford, Dave Ackerman, Caroline Garety and May Belle Clara.

Mr. Keen, music instructor, is from Newton, N. J. He graduated from the University of Michigan with a B. M. degree, has taught in Kingsley, Michigan, and expects to

Turn to page 8, please.

Osteopaths Met Here on Thursday Night

Members of the Eastern Osteopathic Association of Michigan and their wives comprised a group who were served a supper in the dining room of the Presbyterian Church in Cass City Thursday evening, June 20.

Dr. Boyd Shertzer of Howell addressed members of the association on the subject of "Undulant Fever."

Miss McComb and Clayton Parrott Wed

Miss Leone McComb, daughter of Mr. and Mrs. David McComb, of Cass City, and Mr. Clayton Parrott, son of Mr. and Mrs. Ernest Parrott, of Shabbona, were united in marriage at Napoleon, Ohio, on Monday, June 17. They were attended by George McComb, brother of the bride, and Eleanor Glasgow, sister of the groom.

After spending a few days with Mrs. Parrott's sister, Mrs. J. C. Blades, in Detroit, Mr. and Mrs. Parrott will reside in Shabbona where the groom is in business with his father.

Just a Little Late for the 1940 Census

Mr. and Mrs. Harold McGrath are the proud parents of a son born Thursday, June 13, at their home, northwest of Cass City. He has been named Robert John. Mrs. Fred Seeley is caring for mother and son.

Mr. and Mrs. Donald Lorentzen are rejoicing over a son born Monday morning, June 17, at their home. He will answer to the name of Donald Eugene. Mr. Lorentzen's mother, Mrs. John Lorentzen, is caring for them.

Mr. and Mrs. Judson Bigelow of Akron are the happy parents of a baby boy, James Perry, born on Tuesday night, June 18, in Pleasant Home Hospital. The young lad weighs 7½ pounds. The other member of the family is an adopted daughter, Harriett. The Bigelows are former residents of Cass City.

Notice to Tax Payers.

I will collect village taxes at the Bigelow Hardware every Tuesday and Friday of each week. A. N. Bigelow, Village Treasurer.—Advertisement 3t.

CHURCHES

Novesta Church of Christ, Cass City—Ali B. Jarman, Minister. Sunday, June 23:

Bible School, 10:00 to 11:00. Lesson: "Malachi Demands Honesty toward God." Malachi.

Morning worship, 11:00 to 12:00.

Christian Endeavor, 7:30 to 8:30.

Evening worship, 8:30 to 9:30.

Mid-week prayer meeting every Thursday at 8:00 p. m. at the parsonage.

A general meeting of this church will be held at the church at 8:00 p. m. Monday, July 1, to consider calling a minister for the ensuing year. Helen Little, Clerk.

Mennonite Brethren in Christ—E. M. Gibson, Pastor. Sunday, June 23:

Riverside Church—Preaching service, 10:00 a. m. Sunday School, 11:00 a. m. The place of the prayer meeting will be announced later.

Mizpah Church—Sunday School, 10:30 a. m. Preaching service, 11:30 a. m. Prayer meeting at the Wilford Caister home, at eight o'clock, Wednesday evening.

You are cordially invited to attend these services.

Complying with a ruling of our last annual conference, we shall now use our full church name on our announcements, literature and advertising, with the exception of our bulletins which are already printed.

Cass City Methodist Church—Services will be held as usual next Sunday in the Cass City Methodist Church. Arthur Holmberg will preach at the morning worship at 10 o'clock on the topic, "Painting a Picture of God." The choir will sing a special number and other features of the morning service will be carried out. The Church School will meet at 11:15 a. m. and although several of the young people will be attending the youth rally at First Methodist Church, Pontiac, on Sunday evening, the Epworth League meeting will be held at 7:00 p. m. with different ones taking the leadership.

Bethel Methodist Church—Attention Bethel Folk, because this is conference Sunday, you are invited to attend the morning worship service at Cass City Methodist Church or some other meeting as you may choose. The following Sunday and throughout the summer, services will be held at Bethel as follows: Church School, 10:30; worship service, 11:30.

Evangelical Church—R. N. Holsaple, Minister. Week beginning June 23:

Next Sunday morning, the Sunday School will meet and study the lesson, "Honesty toward God." Ed Helwig is the superintendent and there are good classes and teachers.

At eleven the morning worship will be held and the pastor will preach on the subject, "The Secret of a Stable Life."

At seven in the evening the Intermediate and Senior Leagues of Christian Endeavor will meet, and at eight, Dr. Holsaple will preach on "Boiling Over."

Next Tuesday evening the Young People's Missionary Circle will meet for the regular monthly business and social session at the Anthes home, southeast of Cass City.

First Baptist Church—Frank B. Smith, Pastor. Sunday, June 23:

10:00 a. m., Sunday School. A fine class for you.

11:00 a. m., worship.

6:15 p. m., young people.

7:30 p. m., evangelistic service.

Free Methodist Church—F. H. Orchard, Pastor.

Wilmot—Preaching service at 10:00. Sunday School, 11:00. Evening service, 7:45.

Prayer meetings at the different homes as announced from pulpit.

Evergreen—Sunday School at 10:30. Preaching, 11:30.

Let us worship the Lord together.

Church of the Nazarene—George D. Bugbee, Pastor. Sunday, June 23:

10:00, Sunday School. Everyone welcome. We are having rally day, June 30. Our goal is over 100.

11:00, preaching.

2:30, choir practice.

7:00, N. Y. P. S. hour. The young people really have a good program.

8:00, evangelistic service.

Friday, 8:00 p. m., everybody's prayer meeting at home of Mrs. Haley, near the church.

First Presbyterian Church—Sunday, June 23:

Holy Communion at 10:30.

Wednesday, 7:30 p. m., prayer meeting.

Thursday, 7:30 p. m., adult choir rehearsal.

Time to Sell Rubies

In Burma, where the best rubies are found, they are sold only between nine a. m. and three p. m. on clear days because they can be judged best by sunlight. Fine rubies of four or more carats are worth two to five times as much as diamonds of the same size.

Combating Fifth Column On the Fourth

July 4, 1939 Prohibited!

Reading Times

The Merry Go-Round By Drew Pearson and Robert Allen

City And County Set To Observe Bangless Fourth

On These Foundations—America Forever!

FREEDOM OF PRESS
FREEDOM OF ASSEMBLY
FREEDOM OF RELIGION
FREEDOM OF SPEECH
FREEDOM OF BALLOT

Guffey Calls For Re-Election Of Roosevelt

Issue With Poland Not to Be Forced, Nazi Officials Say

Reese To Preside At Demos' Trial

Quiz Car Owner In Racket Probe

Pope Pius To Take 3-Week Vacation

Japs Cut Off Milk From British, French

Pastors Won't Pray Unless They're Free

Danzig Bank Blocks Payments To U. S.

One year ago, on July 4, 1939, the Reading (Pa.) Times came out with an edition that was "censored" as it would be if published under a totalitarian government. The above is a reproduction of the front page. Nearly everything on the page had to be "crossed" out. The edition showed graphically what would be prohibited on the Fourth of July in any newspaper published under Communism, Fascism, or Nazism. In the language of today, the Fourth of July edition was aimed at Fifth column activities.

Strawberry Crop Value 2 Millions

Michigan's strawberry crop, which last year was worth in excess of two million dollars, already is two weeks later in starting this year but appears in condition to total more berries of better quality in 1940.

Reports gathered by the federal-state crop statistician's office in Lansing indicate acreage is 14,700 this year as compared with 13,000 in 1939. Frequent rains have deposited sufficient moisture to carry the crop along even if additional rains are not so plentiful.

In the meantime, three men at Michigan State College are continuing to play a part in service to strawberry culture as a phase of Michigan agriculture.

R. E. Loree, specialist in fruit culture, cites the principal problems in marketing. One of these, necessarily prominent because strawberries must be picked by hand, is that of uniformity of size and ripeness. There is a need for speed in handling to get the berries to the market while they are still in good condition.

Insulated trucks with refrigeration are helping, but even more of these could take berries to more distant markets, says Loree. When the Chicago wholesale markets get more berries than consumers desire, then more distant cities might prove more profitable.

Another man who has played a part in strawberry handling is H. A. Cardinell, recently returned from Hammond, La. He made studies and observations of the southern berries while on loan from the college and in a month observed the handling of 3,054 carlots. H. D. Hootman, extension specialist in horticulture, has been helping Upper Peninsula truck growers plan berry production for the profitable midsummer and hotel trade.

Northwest Elmwood

Bach defeated Bad Axe Sunday, 5 to 4, the game going 10 innings.

Mrs. Frank Kurkie and Mrs. Ann Gerou of Detroit spent the week-end at the home of Mr. and Mrs. Joseph Grappan.

Mr. and Mrs. Frank Gerou of Port Huron spent the week-end visiting relatives in this community.

Murl and Vern LaFave attended the Detroit-Washington game on Sunday.

Hyacinth Legend

In Greek mythology the hyacinth is said to have sprung from the blood of the beautiful Spartan youth, Hyacinthus, the friend of Apollo. Zephyrus, jealous because Hyacinthus favored Apollo, caused the latter's quoit to strike and kill the youth while the two were at play. Grief-stricken, Apollo caused a purple flower to spring from the drops of blood that fell from the brow of Hyacinthus.

Advertise it in the Chronicle.

MICHIGAN BERRIES -- WITH CREAM

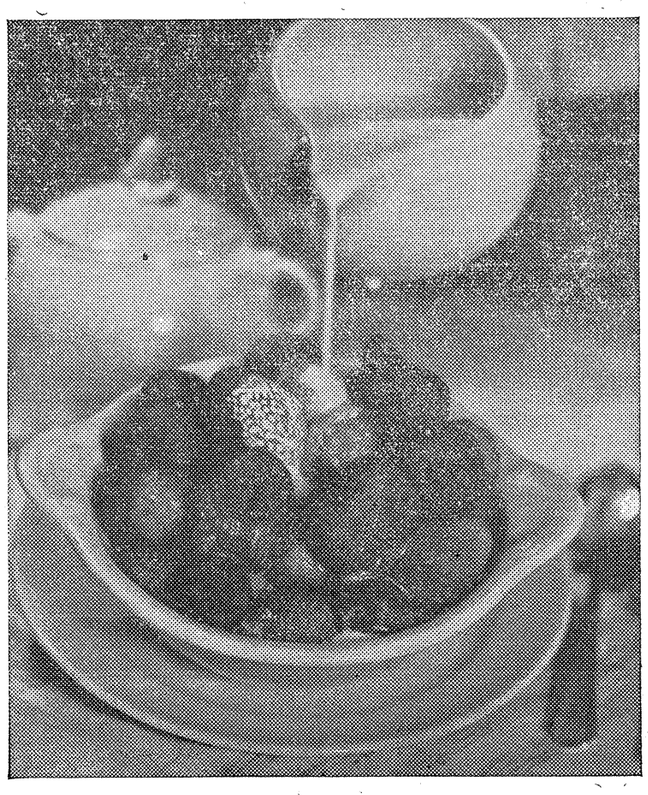

Two weeks later than usual but promising an excellent crop, the Michigan harvest of strawberries will provide work for pickers, extra cash for growers and variety for consumers. Above is a typical dish of Michigan berries receiving some Michigan cream. Growers, say Michigan State College fruit specialists, will get better prices if they package uniformly sized and uniformly ripened fruit for the wholesale and retail trade.

NOVESTA.

Death of Walfred Wernis—

Walfred Wernis, a sufferer from ulcers, passed away at the Morris Hospital in Cass City on Monday, June 17. He had been in ill health for two years and was quite sick at the home of his parents for two weeks.

Funeral services were held in St. Pancratius Church in Cass City on Thursday morning conducted by Fr. Werm. Burial was in Elkland Cemetery.

Born July 14, 1912, in Riverton, Illinois, Mr. Wernis lived for several years in Detroit where he followed the trade of machinist. He was united in marriage with Miss Lucile Tatoris on May 5, 1934.

Besides his widow, he leaves a son, 5, and two daughters, one 3 years of age, and the other two weeks; his parents, Mr. and Mrs. Joseph Wernis; a sister, Mrs. Josephine Marcum, of Ferndale; and an aunt, Mrs. Della Urban, of Detroit.

The Ill—

Mrs. Margaret Bridges was admitted to the Pleasant Home Hospital on Saturday for observation. She was able to return home on Monday.

Word was received Sunday that Joseph Kloc, 12-year-old son of Mr. and Mrs. Joseph Kloc, Sr., is in a serious condition in an Ann Arbor hospital as the result of an injury received while playing football. The boy has been in the hospital the past two weeks.

Mr. and Mrs. George Oliver, daughter, Lois, son, Paul, and Mrs. Mary Lemon of Detroit visited Sunday at the home of Mr. and Mrs. John Pringle.

Mr. and Mrs. Park Wagg of Pontiac visited Friday at the home of Mr. and Mrs. A. H. Henderson. Mr. and Mrs. George McArthur returned to Pontiac with Mr. and Mrs. Wagg to spend the week-end with relatives there.

George Funk, who is employed in Detroit, spent the week-end at his farm home here.

Bud Peasley of Pontiac visited Friday at the home of his parents, Mr. and Mrs. Claud Peasley.

Miss Maxine Horner returned home Friday evening after spending two weeks with her sister and brother, Mr. and Mrs. Paul Wethers, in Buffalo, N. Y. Mr. and Mrs. Wethers and little daughter accompanied Miss Horner here and spent Friday night and Saturday with Mr. and Mrs. Robert Horner.

Mrs. Earl McKellop and Mr. and Mrs. Horteller of Pontiac were guests of Mrs. Lee Brooks Saturday. Sunday guests were Mr. and Mrs. Morris O'Connor and family and Mr. and Mrs. Forest Tyo and family, all of Cass City.

Mr. and Mrs. Neil Hicks and two daughters of Flint visited at the home of Mr. and Mrs. Claud Peasley Sunday.

Mr. and Mrs. William Collins of Avoca called at the home of Mr. and Mrs. Charles Cunningham on Saturday.

Mr. and Mrs. Lawrence Lowell and daughter of Millington visited Saturday night and Sunday at the home of Mr. and Mrs. Lloyd Atkin.

Mr. and Mrs. A. H. Henderson and Mrs. A. J. Pratt and sons visited Sunday at the home of Mr. and Mrs. Arthur Henderson in Kingston.

Mr. and Mrs. Clark Zinnecker and Mrs. John Pringle went to Detroit Tuesday to spend a few days with relatives and friends there.

Ships of Stone

At Oland, an isle off the coast of Sweden, may be seen prehistoric Stone age remains, huge rocks carved in the form of Viking ships replete with benches for the rowers.

North Carolina Peaks

One hundred and twenty-five mountain peaks in North Carolina are over 5,000 feet high; 43 of these are above 6,000 feet.

U. S. S. R. Population

The latest estimate of the population of the Union of Soviet Socialist Republics is 170,000,000.

What 100 Years Have Done for Your Feet.

Dr. Joseph Lelyvelt, director of the National Foot Health Council, tells of the torture caused by fallen arches, bunions, and other foot ailments, but how one now can be foot-happy, if he follows the rules. Read the article about feet in The American Weekly, the world's greatest weekly magazine, with the June 23 issue of The Detroit Sunday Times.—Advertisement.

WANTED— A NEW DRESS

Take a second look through your wardrobe and pick out the gowns that are not so hopeless! Send them to us . . . . you'll marvel at the wonders we work in putting new life in the colors and fabrics.

Robinson's Laundry and Dry Cleaning

GREENLEAF.

Dr. and Mrs. Tripp and son, Bobbie, of Detroit were Saturday night visitors at the McKay farm. Bobbie, who is a student at the Cranbrook School near Pontiac, remained to spend the summer with his aunt, Mrs. Brown.

Charles Roblin, who has been attending school in Lansing, is home for the summer.

Mr. and Mrs. Pete Sinclair were dinner guests at the Thorpe home Sunday.

The Ladies' Aid of the Fraser Church will meet at the home of Mrs. Charles Bond on Thursday, June 27.

Mr. and Mrs. Keith Karr are back from their wedding trip and are now settled in their home in Detroit.

Quite a number from this community and also from Ubly attended the barn dance in the new Pierce barn on the old Ballard place Friday night. Manley Fay furnished the music.

Malcolm McCallum, who has been employed in Detroit, is spending a month at the home of his parents, Mr. and Mrs. Neil McCallum. Malcolm is on a leave of absence on account of illness.

Mrs. Sullivan Miss Caroline Garety and Miss Pauline Shier will leave Sunday for Mt. Pleasant where they will attend summer school.

Mr. and Mrs. Charles King of Pontiac spent the week-end with Mr. and Mrs. H. Willis.

The Greenleaf Store is sponsoring a free show at New Greenleaf every Friday night. Have you been there?

BEAULEY.

Mr. and Mrs. C. E. Hartsell were Sunday dinner guests of Mr. and Mrs. George Hartsell June 9.

Mr. and Mrs. Arthur Moore drove to Gladwin Sunday. Their daughter, Mrs. Donald Lester, and little son, Gary, returned home with them Sunday evening.

Mr. and Mrs. Frank Reader were callers in Kingston Friday afternoon.

Dinner guests of Mr. and Mrs. Alva MacAlpine on Father's Day were their parents, Mr. and Mrs. Duncan MacAlpine and Mr. and Mrs. Charles E. Hartsell.

The Ladies' Aid will meet Thursday afternoon in the church basement for dinner and work.

Mr. and Mrs. Stanley MacAlpine spent Saturday afternoon in Harbor Beach where they called on Mrs. MacAlpine's cousin, Donald Abbe, who is very ill there.

Callers at the Alva MacAlpine home Sunday afternoon and evening were Mr. and Mrs. Art Farden and Gilbert Farden of Royal Oak, Miss eJan Wallace, Miss Euleta Heron and Jack Leach.

A miscellaneous shower will be given Friday evening at the home of Mr. and Mrs. Willard Ellicott for Mr. and Mrs. Clifton Endersbe, who were recently married.

Mr. and Mrs. Arthur Moore, Mrs. Donald Lester and son called at the home of Mr. and Mrs. Claude Hinnman Sunday evening.

Value of Fishery Products

The value of fishery products in the United States last year was $100,845,000.

CARLOAD OF

Wire Fencing and Steel Posts

We are able to make a very good price due to the fact that there have been several advances in fencing since this carload was purchased.

The Farm Produce Company

CASS CITY

BUY A BARGAIN from your CHEVROLET DEALER

NEVER BEFORE HAVE WE OFFERED SUCH FINE USED CARS AT SUCH LOW PRICES

NOTICE! SAME LOW PRICES EXTENDED TO WHOLESALERS.

Our Loss Your Gain!

1935 Pickup

All new tires, license, large carrying capacity. Interior in good shape. Just the thing for farm use and for our price you can't afford not to have it for

$169.00

Down Go Prices on USED TRUCKS

See our line-up before you buy or we both lose dough

1936 Ford Tudor

with trunk and heater. Tires in good condition. Painted black with green wheels. Upholstery clean and in good shape. New Hastings rings in this one and we'll guarantee it for

$245.00

1936 Chevrolet Town Sedan

equipped with trunk. Black with really excellent rubber and clean inside for it had seat covers all its life. Hot water heater and fan defroster. All steel top and hydraulic brakes. Backed by our guarantee for

$255.00

LARGEST STOCK IN TOWN

—All reconditioned, repriced and guaranteed.

1936 Buick Coupe

The smoothest running job in our extensive collection. U. S. Royal Master tires, like new. A 'glamour boy' who really wants to cut a swath couldnt do better for Buick prestige is world-wide. If you try it—you'll buy it for

$295.00

Bulen Chevrolet Sales

GET A REAL USED CAR BARGAIN FROM YOUR CHEVROLET DEALER Today

GAGETOWN

Mr. and Mrs. John Fournier had as their guests on Father's Day, Miss Genevieve Boisvert and Clarence Dunkelberger of Ypsilanti, Mrs. Marie Thomas and daughter, Shirley, and Jess Howe of Ann Arbor, Miss Myrtle Fournier of Detroit, Miss Emma Lou Smith of Caro, Miss Allison Milligan of Cass City, Mr. and Mrs. Burton Roth, and sons, Preston and Lynwood Fournier, of Sebewaing. Miss Shirley Thomas remained to spend the summer with her grandparents.

Mr. and Mrs. Elmer Butler have announced the engagement of their eldest daughter, Miss May, to Lyle Dubbs of Tawas City. The marriage ceremony will take place June 22, at the home of the bride-elect's parents. Wednesday afternoon at the home of Mrs. Kenneth Butler a bunco party and shower was given in her honor. There were 65 ladies present. Ice cream and assorted cakes were served by the hostess.

Mr. and Mrs. Frank Weatherhead of Kilmanagh has purchased of Mrs. Heber Howell her residence on East Main Street and Mrs. Howell has purchased the small residence on Cleaver Street of John Fournier. Mr. Weatherhead will be one of the teachers in the public school next year and Mrs. Weatherhead will operate a beauty shop in her new home. Possession by both parties will be given immediately.

Mr. and Mrs. Adolph Thiel and family and Mr. and Mrs. Wesley Downing and family attended the county normal graduating exercises in Caro last Thursday evennig. Miss Marie Thiel and Miss Genevieve Downing were among the graduates.

Mrs. Rebecca Hurd went to Berkley Wednesday to visit with Mr. and Mrs. Stephen Hurd for two weeks. Mrs. Hurd received word Tuesday of the death of her daughter, Mrs. Ed Greene, of Pharr, Texas. Mrs. Greene was well known here.

Mr. and Mrs. G. W. Purdy spent Sunday at their cottage at Rose Island. Tuesday Mrs. Purdy entertained the Euchre Club of which Mrs. Lawrence McDonald was captain at the cottage. Potluck dinner was served.

Miss Dolores Secoir of Edenville, who spent the past week with Miss Christine Laurie, returned home Tuesday with her parents, Mr. and Mrs. J. Secoir, who visited friends here for the day.

Miss Florence McKinnon of Detroit is spending two weeks with her parents, Mr. and Mrs. Neil McKinnon.

Mrs. Josephine King of Pontiac and Miss Margaret King of Detroit were last week guests of Mrs. Anna High and daughter, Helen.

Mrs. Anna Benninger left Friday to visit Mr. and Mrs. John Freudenmuth in Midland and Mr. and Mrs. Michael Fournier in Morrice.

Mrs. Gertrude Giroux of Detroit as a week-end guest of her parents, Mr. and Mrs. Isaiah Montreuil, and attended the graduating exercises at Bad Axe. Her daughter was among the graduates.

Mrs. John Malling of Pasadena, California, was a guest last week at the home of Mr. and Mrs. Don Wilson and of her father, Robert J. Wills.

James Wilson and Mr. and Mrs. Robert Wilson and family spent Sunday at North Star at the home of Rev. and Mrs. Lloyd Wilson and family and attended camp meeting while there.

Mrs. Leo Karner of Detroit spent the first of the week with her mother, Mrs. Delphine Goslin.

Mrs. Joseph Freeman and Mrs. Willard Cornell were Bay City callers Friday.

The Methodist Missionary Society met Wednesday with Mrs. George Ricker of Owendale.

Mr. and Mrs. Elmer Butler and Mrs. Charles Beach visited in Prescott Sunday.

Miss Florence Smith, a teacher in the River Rouge schools, will spend her vacation at her farm home here.

Rev. and Mrs. W. Dafoe left Wednesday to spend until Sunday at the Methodist conference in Pontiac.

Mr. and Mrs. M. S. Karr were week-end guests of the latter's brother, Mr. and Mrs. John MacEachin, of Pontiac.

Lyle Deneen visited this week with Freddie Profit at the Clair Profit home.

F. D. Hemerick left last week Wednesday with the Ford dealers' group to visit the World's Fair as guests of Henry Ford.

Harry P. Densmore spent a few days last week in Kentucky and Tennessee to secure help for the farmers raising beets in this vicinity.

Mr. and Mrs. Menley Helleck of Port Austin called on friends here Sunday.

Mr. and Mrs. Glen Deneen and family were guests of Mr. and Mrs. McHenry of Pontiac over the week-end.

J. L. Purdy and D. G. Wilson transacted business at Turner on Friday.

Melvin Fischer, son of Mr. and Mrs. Julius Fischer and teacher for several years in an Owosso school, left Saturday by motor for California and from there will take a steamer for Porto Rico where he will spend his summer vacation.

Miss Evelyn McHenry of Mt. St. Joseph, Ohio, is spending a few weeks with her parents, Mr. and Mrs. Claude McHenry.

Mrs. Ralph Clara and son, Paul, returned Sunday from a week's visit with relatives in Detroit.

Kenneth Deneen, having spent the school year with his uncle, Fred Dorsch, will visit his father, Elmer Deneen, in Pontiac this summer.

Mrs. Luch Dosser Smith and Miss Meadie Karr will attend summer school at the Ypsilanti Normal.

Rudolph Witzke, Harry Wood, Pearl and Ardis Wood were Sunday callers at the home of Mr. and Mrs. Harold Parker of Grindstone City.

RESCUE.

Miss Ina Moore was the leader of the League on Sunday evening.

The Ladies' Aid met at the church basement Thursday of this week.

Mr. and Mrs. Donald McComb, Milton, Norris and and Perry Mellendorf were callers in Caseville Sunday afternoon.

A large crowd attended the Children's Day exercises at the L. D. S. Church on Sunday evening.

Mrs. DeEtte J. Mellendorf and son and grandson were callers in Cass City Saturday.

There will be no services at the Grant Church next Sunday morning. Epworth League will meet next Sunday evening.

A miscellaneous shower will be held on Friday evening for the newly-weds, Mr. and Mrs. Clifton Endersbe, at the home of Mr. and Mrs. Willard Ellicott.

Jefferson Darling spent the week-end in Pontiac visiting relatives.

Charles Eshmore, who works at the George Severn store in Cass City, spent Sunday at his parental home here.

A large number attended the shower for Mr. and Mrs. Donald McComb at the Roland Hartsell home Saturday evening.

'Western' Author's Memorial

In honor of Owen Wister, whose novels of Western life widely advertised the grandeur of the region, a major peak in the Grand Teton National park, in Wyoming, has been officially designated Mount Wister by the United States board on geographical names. Mount Wister, 11,480 feet in elevation, lies two miles to the south of the well-known landmark the South Teton. Mr. Wister, who died in July, 1938, at the age of 78 years, was a native of Philadelphia and a grandson of the celebrated English actress, Fanny Kemble, who retired from the stage upon her marriage to Pierce Butler, a Georgia Planter.

Pineapple Cheese

Pineapple cheese, which is said to have had its origin in Litchfield county, Connecticut, about 1845, is so named from the fruit whose shape it bears. It is a hard, rennet cheese made from the whole milk of cows and rather highly colored. The curd is pressed into the desired shape and the cheese is then dipped for a few minutes in water at 120 degrees Fahrenheit and then for 24 hours is put into a net which gives it the diamond-shaped corrugations. It requires several months to ripen, during which time the surface is rubbed with oil.

Grand Coulee Cement

Enough cement was put into the Grand Coulee dam in one month recently to cover a football field to a depth of 265 feet, 25 stories high. The builders averaged 15,000 cubic yards a day, setting a world's record.

Skillful Peiping Chefs

Chefs in Peiping maintain their world-wide reputation for skill while spurning all modern cooking methods. On an ancient coal stove with a single burner they prepare elaborate banquets for a dozen people.

Stamp It Out!

Don't throw that lighted cigaret out of your car window! Maybe, if you do, another fire will be pegged on the chart at conservation department headquarters. There have been too many fires already, in 1940: 11,263 acres burned over in 542 fires in the first seven weeks of the forest fire season! If you are careless, you may destroy something which belongs to you. The state forests DO belong to you!

LOCALS

Norris Stafford and Miss Bertha Goldamer, both of Reed City, spent Wednesday night and Thursday as guests of Mr. Stafford's mother, Mrs. Roy Stafford.

Miss Ethel Campling and James Harfst of Detroit spent the week-end with Rev. and Mrs. Frank B. Smith.

Mr. and Mrs. Thomas Colwell left Sunday to spend the week with their sons, Roy and Ray Colwell, in Saginaw.

Mr. and Mrs. W. J. Buckley, Mrs. Irene Kennedy and Jean Levan, all of Detroit, and Angus McDonald of Sheridan spent Sunday at the home of Sarah McDonald.

Lester Bailey spent Sunday at the home of his daughter, Mrs. George Ranck, at Coleman. Mrs. Bailey, who had spent a few days there, returned home with him on Sunday evening.

Mr. and Mrs. Stanley Asher were callers in Mt. Pleasant Friday, bringing back their daughter, Miss Glenna Asher, a student at Central State Teachers' College, who will spend the summer vacation at her home here.

Mrs. Beulah Calley and daughter, Miss Wilma, of Detroit spent Saturday night and Sunday as guests in the home of Mrs. Calley's sister, Mrs. J. H. Bohnsack. Miss Wilma was returning home after attending Central State Teachers' College in Mt. Pleasant.

Mr. and Mrs. Ernest Croft were callers in Alma Thursday. Their daughter, Miss Marjorie Croft, a student at Alma College, returned home with them to spend the summer vacation here. Mr. and Mrs. Croft and Marjorie were visitors at the A. J. Callan home in Midland on their way home. Mrs. Callan is a sister of Mrs. Croft.

Mr. and Mrs. William J. Martus were in Burnside Saturday morning to attend the marriage of Mr. Martus' great niece, Miss Norrine Martus, and Harland Ford. The ceremony was performed in St. Mary's Church. Forty-one relatives were seated at the wedding dinner. A reception was held at the home of the bride's parents Saturday evening.

Miss Phyllis Koepfgen, local student attending Alma College, has been elected social chairman of the Kappa Iota literary society on the campus for the first semester of the 1940-41 school year. A sophomore this year, she has been a member of the campus chapter of YWCA, A Capella choir, and the kiltie band. She is the daughter of Mr. and Mrs. Lyle Koepfgen, and was graduated from the local high school in 1938.

Sunday guests at the Nelson Harrison home were Elmer Atwell and Mr. and Mrs. Joseph Frutchey of Saginaw and Mr. and Mrs. Russell Atwell and son, Joe, of Windsor.

Rev. and Mrs. R. N. Holsaple were among the 45 present Monday when the Thumb Evangelical ministers and their families met at Bay Shore Park for a steak fry and potluck dinner.

James Milligan was a visitor in Mt. Pleasant Friday. His sister, Miss Marjorie Milligan, who attends Central State Teachers' College, returned home with him for the summer vacation.

Mr. and Mrs. H. P. Lee attended the funeral services of Mrs. Alice Warren, better known to the older settlers as Alice Allwood, Wednesday, June 19, at the home of her daughter, Mrs. Gus Meyer, at Monroe.

Dr. H. T. Donahue, a graduate from Caro High School in 1923, attended the annual alumni reunion and dance of Caro High School held Friday evening in the school auditorium. Dr. Donahue extended the welcome from the alumni to the Class of 1940.

Leonard Damm has purchased the residence on the corner of Seeger and Third Streets from the J. Henry Smith Estate. He and Mrs. Damm and their two children expect to move here from Saginaw in July to occupy their newly-purchased residence.

Mr. and Mrs. Robert Holsaple of Akron, Ohio, were Sunday afternoon visitors at the home of the former's parents, Dr. and Mrs. R. N. Holsaple. Neil Holsaple, who had spent two weeks with his grandparents here, returned home with his parents Sunday afternoon.

Walter Anthes, daughters, Miss Lucile and Miss Alice, and son, Paul, and Miss Irene Hall, spent Sunday in Pontiac and Greenfield Village. Mrs. John Race, who had spent a few days at the Anthes home and attended the graduation exercises of Cass City High School, returned to her home in Pontiac with them.

Mr. and Mrs. Nelson Harrison spent Saturday night and Sunday with relatives and friends in Detroit and on Sunday morning attended the sunrise service at Belle Isle. From Detroit, Mr. and Mrs. Harrison drove to Ypsilanti for their daughter, Miss Margaret, who has been attending Michigan State Normal there. She returned home with them Sunday evening. Miss Harrison left Wednesday for Detroit where she has employment for the summer.

Miss Betty Stirton returned Friday from Mt. Pleasant where she has been a student at Central State Teachers' College.

Park Zinnecker of Flint visited his parents, Mr. and Mrs. William Zinnecker, Saturday afternoon and Sunday.

Mr. and Mrs. Clayton Fader and son of Detroit visited at the home of Mr. and Mrs. Ralph Ward on Wednesday.

Mr. and Mrs. O. J. Boat of Oxford were Sunday guests of Mrs. Boat's sisters, Miss Ann and Miss Elizabeth Kleinschmidt.

Mrs. Fred Maier entertained a number of friends Friday afternoon in her home, on Third Street, from three to five o'clock. A social time and luncheon was enjoyed.

Mr. and Mrs. J. D. Turner and daughters, Miss Esther and Miss Donna, spent Sunday in Detroit. Miss Esther remained to take up her work in the J. L. Hudson Store.

Joseph Gast of Flint spent Wednesday night and Thursday in Cass City. Mrs. Gast, who had spent a few days with her parents, Mr. and Mrs. Fred White, returned to her home with Mr. Gast Thursday afternoon.

Mr. and Mrs. Sherman Clark and Mr. and Mrs. Eugene Clark, all of Port Huron, visited Sherman Clark's mother, Mrs. Sarah Clark, in the home of her daughter, Mrs. Fred White, Sunday afternoon. The party were on their way home from a trip through the North.

Mr. and Mrs. W. D. Striffler spent from Thursday until Monday night at the home of their daughter, Mrs. R. H. Orr, in Pigeon while Mr. and Mrs. Orr visited Mrs. Orr's brother, Rev. Roy Striffler, in Geneva, Ohio. From Geneva, Mr. and Mrs. Orr visited their son, Robert Orr, at Butler, Pa., where he has been employed, and accompanied him to Cincinnati, Ohio, where he will attend school.

Mr. and Mrs. Audley Kinnaird entertained at a delightful dinner Sunday in their home, on West Main Street, in honor of the 81st birthday of Mrs. Kinnaird's father, R. S. Proctor. A beautiful birthday cake with lighted tapers, made by a niece, Mrs. J. Harold Omsted, centered the table. Guests were Mr. and Mrs. Proctor and Mrs. Martha Horn of Cass City; Mr. and Mrs. James Proctor, Mr. and Mrs. Robert Proctor, Mr. and Mrs. Clifford Proctor and Mr. and Mrs. Harold Omsted, all of Flint. Miss May Beckman of Bad Axe was an afternoon visitor at the Kinnaird home.

Jim Milligan and Albert Leslie spent Monday and Tuesday near Toronto, Ontario.

Mr. and Mrs. Thomas Keenoy and Shirley Surprenant spent the week-end in Detroit.

Mrs. A. D. Gillies, who is making her home with her son, Blake Gillies, at Plymouth, is spending the week in Cass City.

After a two weeks' visit at the home of her daughter, Mrs. A. C. Edgerton, at Clio, Mrs. I. A. Fritz returned home Thursday.

Robert H. Brown of Selfridge Field, Mt. Clemens, spent Saturday afternoon and Sunday with his mother, Mrs. Robert Brown.

Mr. and Mrs. Joseph Brown and daughter, Ruth, of Detroit were week-end guests in the home of Mr. Brown's sister, Mrs. A. E. Goodall.

Mrs. Paul O'Steen returned to her home in Detroit after spending some time with her parents, Mr. and Mrs. Ivan Vader, because of illness.

Saturday afternoon and Sunday guests at the home of Mr. and Mrs. Harve Klinkman were Mr. Klinkman's aunts, Mrs. Morton Emerson, of Pomona, California, Mrs. Jesse Segel and daughter, Frances, of Jackson; Dorus and James Klinkman of Detroit.

Miss Johanna Sandham and Archie Vallier, both of Detroit, were guests of the former's parents, Mr. and Mrs. J. A. Sandham, from Saturday until Tuesday. Miss Johanna remained and is spending the week here. On Sunday, Mr. and Mrs. Roy Briggs of Bad Axe, Mr. Vallier and Miss Sandham spent the day at Caseville.

Mr. and Mrs. G. B. Dupuis and Mrs. Hugh Munro visited relatives at Standish Sunday.

Miss Helen Doerr of Flint spent the week-end with her parents, Mr. and Mrs. Herman Doerr.

Mr. and Mrs. John Keenoy of Detroit spent Saturday at the home of Thomas Keenoy.

Mr. and Mrs. A. R. Kettlewell and family visited relatives in Croswell Sunday afternoon.

Miss Elizabeth and Miss Frances Seed visited Mrs. George Ranck at Coleman Thursday afternoon.

Little Miss Patricia Grace Marshall of Yale is spending the week with her aunt, Mrs. John Hoskin.

Mrs. H. O. Greenleaf of Millington spent a few days the first of the week with relatives and friends here.

Mr. and Mrs. Garrison Moore of Detroit are spending the week as guests of the former's mother, Mrs. Mary M. Moore.

Mrs. Robert Milligan was a delightful hostess Thursday when she entertained the members of the Malfem Club in her home for a social afternoon and luncheon.

Mrs. Aline Ballard and daughter, Nancy, of Chicago and Mrs. Richardson of Athens, Ohio, came Friday to spend some time in Cass City. Mrs. Ballard and Mrs. Richardson are daughters of the late Mr. and Mrs. J. Henry Smith.

Jack Fritz, son of Mr. and Mrs. A. G. Fritz, was graduated with honors from the Visitation High School in Detroit recently, in a class of 74. Mrs. Fritz before her marriage was Miss Golda Hoagland and spent her girlhood days at Cass City.

It's fun to cook with SHELLANE

Now just as cheap as city gas rates—

Shellane brings all the conveniences of city gas service to the home in the country at no more cost than the usual city gas rate! You'll discover new taste thrills, new cooking skills!

D. A. Krug

Phone 205R2

Cass City, Mich.

SHELLANE COOKING GAS

Saves 3 hours drudgery a day

A&P FOOD STORES

Buy the Champion!

8 O'Clock Coffee

3 pound bag 39c

Iona Tomatoes or Corn 4 No. 2 Cans 25¢

RINSO 2 large pkgs. 39¢ Giant package, 57c

Wax Paper, Queen Anne ..... 125 ft. roll 10c
Paper Napkins, Cello ..... pkg. 5c
Kellogg's Corn Flakes lge. pkg. ..... 2 for 19c
Ann Page Salad Dressing ..... quart jar 27c
Ketchup, 14 ounce bottle ..... 3 for 25c
Nectar Tea, O. P. ..... ½ lb. pkg. 29c
Mustard ..... quart jar 10c
Doughnuts ..... dozen 10c

IONA FLOUR 24½ lb. bag 63¢ All Purpose Flour

PURE LARD 4 lbs. for 25¢

Lux Flakes ..... lge. pkg. 23c
Lifebuoy Soap ..... cake 6c
Lux Toilet Soap ..... cake 6c
Spry, lb. can 18c ..... 3 lb. can 47c
Northern Tissue ..... 5 rolls 21c
Dole's Pineapple, Sliced ..... 15 oz. can 11c
Ann Page Beans, 16 oz. can ..... 4 for 21c
A. & P. Peas, No. 2 Can ..... 2 for 27c

RING or LARGE BOLOGNA lb. 13¢

FANCY SLAB BACON lb. 12¢

Bananas . . . lb. 5c

. . June—National Dairy Month—Buy Dairy Products . .

ENJOY AUTOMATIC HOT WATER all summer long

—at the turn of the faucet!

Through the hot summer months, plenty of hot water is a necessity. On the farm, as well as in the city, ELECTRIC water heating is the ideal method—safe, economical, clean, dependable.

An electric water heater gives you a definite supply of automatic hot water, ready at all times to serve you in many ways. Farm families find it a great help in the milk house for quick cleaning of dairy equipment, in the barns, in the home and wherever hot water is needed. And, after a hot day's work, you can enjoy a refreshing, invigorating bath, without waiting. No stairs to climb, no fires to start.

Install an electric water heater now and have plenty of hot water without lifting a finger to heat it. Stop in at our office and we will gladly tell you more about this modern automatic water heating service.

THE DETROIT EDISON COMPANY

Heat your water* the same way you light your house

*for as little as $1.98 a month

CASS CITY CHRONICLE
Published every Friday at Cass City, Michigan.

The Tri-County Chronicle established in 1899 and the Cass City Enterprise founded in 1881, consolidated under the name of the Cass City Chronicle on April 20, 1906. Entered as second class matter at the post office at Cass City, Michigan, under Act of March 8, 1879.

Subscription Price — In Tuscola, Huron and Sanilac Counties, $1.00 a year in advance. In other parts of Michigan, $1.50 a year. In United States (outside of Michigan) $2.00 a year.

For information regarding newspaper advertising and commercial and job printing, telephone No. 13R2.

H. F. Lenzner, Publisher.

LOCAL ITEMS

Mrs. Paul Conway of Shady Shores came Monday to spend the week with her mother, Mrs. Frank Rennels, and other relatives here.

Among the students planning to attend summer school at Mt. Pleasant are the Misses Ruth Schenck, Mildred Karr and Maxine Horner.

James Garety, Mrs. Marie Sullivan, Misses Caroline and Dorothy Garety were Sunday dinner guests at the Peter Garety home at Tyre.

Mr. and Mrs. E. H. Smith and daughter, Janice Ruth, of Detroit were Sunday guests of Mrs. Smith's parents, Dr. and Mrs. I. A. Fritz.

Mrs. William Noble and son, Eddie, of Lapeer came Monday evening to spend a few days with her parents, Mr. and Mrs. J. D. Turner.

Mrs. P. A. Schenck and Mrs. C. M. Wallace entertained at a bridge luncheon Tuesday afternoon in the Schenck home. Bridge was played at nine tables, honors being won by Mrs. Mary Holcomb, Mrs. E. W. Douglas and Mrs. Clarence Burt.

Sunday guests at the Ben Kirton home were Mr. and Mrs. George Morin of Deckerville, Mr. and Mrs. Frank Kunze, Sr., Mr. and Mrs. Frank Kunze, Jr., and family of Minden. Mrs. Morin and Mrs. Kunze, Sr., are sisters of Mrs. Kirton.

Miss Carol Rosenow of Ludington was the guest of her sister, Miss Florence Rosenow, at the Dr. R. N. Holsaple home, from Wednesday until Sunday. Miss Florence Rosenow, a teacher in Cass City School, returned to Ludington with her sister Sunday.

Frank Striffler of Detroit has bought the Dr. H. T. Donahue residence, corner of West and Houghton Streets, and Mrs. Striffler's mother, Mrs. John Spangler, and Mr. Spangler of Detroit expect to move there in about two months.

Mr. and Mrs. Alex Marshall of Kingston, Mrs. John Marshall, Sr., Mrs. Levi Bardwell and Mr. and Mrs. John Marshall, Jr., and son, Roger William, spent Sunday with John Marshall, son of Mr. and Mrs. Alex Marshall, at Port Huron.

Mr. and Mrs. Warn Jackson and daughter, Nancy, of Detroit came Friday to visit friends and relatives here. Mr. Jackson returned home Sunday evening and Mrs. Jackson and Nancy remained to spend the week at the G. A. Tindale home. Saturday night and Sunday, Mr. and Mrs. Jackson and daughter were guests of Mr. and Mrs. Roy Briggs of Bad Axe at the Sandham cottage at Caseville.

Honoring Mrs. Lyle Bardwell on her birthday, a number of relatives and friends surprised her at her home on Third Street Friday evening. Guests were Mr. and Mrs. Sim Bardwell and daughter, Miss Theda, Mr. and Mrs. George Seeger and sons, Don and Jerry, Mr. and Mrs. Clifton Champion and son, Sammy, and Lawrence Copland, Jr. A potluck supper was served and Mrs. Bardwell received a number of gifts.

A delightful time was that of Wednesday evening when a surprise potluck supper was served in the home of Mr. and Mrs. Harve Bartle in honor of Mrs. Bartle and Mr. Bartle's father, George Bartle, both of their birthdays being June 11. Guests besides Mr. and Mrs. Harve Bartle and family were Mr. and Mrs. George Bartle, Mr. and Mrs. Herbert Bartle, Mr. and Mrs. Lawrence Bartle, all of Cass City; and Mr. and Mrs. Carl Ritter of Bad Axe.

Miss Virginia Day of Wyandotte and John Day of Detroit spent the week-end with their mother, Mrs. Zora Day. Miss Virginia remained to spend a few weeks here and is planning to leave Cass City July 8 on a trip to visit relatives and friends in California. Miss Day will make the trip by train and will go by way of the Grand Canyon and return through Vancouver, British Columbia, visiting many places of interest on the trip both to and from California. She expects to be gone seven weeks. Miss Day, who has been teaching in a Wyandotte school, has accepted a position in the same school for the coming year.

Gordon Thomas of Oxford was a guest in the H. F. Lenzner home over Sunday.

Mrs. Sheldon Peterson of Bad Axe was a Cass City visitor Monday afternoon.

Miss Eva Baskin of Detroit visited friends in Cass City a few days the first of the week.

June Auslander is spending the summer with her aunt, Mrs. Andrew Hem, in Flint.

The Ellington Grange will meet at the home of Garfield Leishman on Friday evening, June 21.

Mr. and Mrs. Arthur Little and Bruce and Lois visited Thursday evening at the home of Postmaster and Mrs. R. C. Jacoby in Caro.

Orton H. Jones, engineer at the CCC Camp at Kingston, has been transferred to a similar camp at Marion, Ohio, and left for that place Wednesday. Mr. Kruger will succeed Mr. Jones at Kingston.

Sunday guests at the home of Mr. and Mrs. Robert Charlton were their daughter, Mrs. Norman Gillies, of Croswell, their son, Kenneth Charlton, of Unionville, and Mr. and Mrs. Joseph Parrott of Cass City.

Mrs. Curtis Hunt, Mrs. Edwin Fritz, Mrs. H. M. Bulen and Mrs. C. Hamilton spent from Wednesday until Sunday night at the Bulen cottage at Indian River. Mr. Hunt, Dr. Fritz, Mr. Bulen and Mr. Hamilton also spent Saturday night and Sunday there.

Mr. and Mrs. Andrew N. Bigelow and Charles Bigelow were callers in Detroit Sunday where they met their sister, Miss Florence Bigelow, of New York City, who returned to Cass City with them and is spending a few weeks with her parents, Mr. and Mrs. Samuel Bigelow.

Mrs. Charles D. Keough of Tonopah, Nevada, who underwent an operation in Hurley Hospital at Flint, is recovering nicely and is spending some time with her sister, Mrs. A. C. Edgerton, at Clio. She expects to visit her parents, Dr. and Mrs. I. A. Fritz, some time in the near future.

Sunday guests at the Alex Henry home included Mrs. Mary Shell and Mr. and Mrs. Bernard Porter and son, James, all of Eastwood, Ontario, and Mr. and Mrs. Clare Keeler and Mr. and Mrs. John Keeler, all of North Branch. Delbert Henry of Detroit visited his parents, Mr. and Mrs. Alex Henry, over the week-end.

Week-end guests at the home of Mr. and Mrs. Paul Auslander were Mr. and Mrs. William Butts and son of Barryton, Mr. and Mrs. Andrew Hem and son and Miss Elaine Hyatt of Flint. Mrs. Butts and Mrs. Hem are daughters of Mr. and Mrs. Hyatt. Jean Auslander, who has spent the last month with her sister in Flint, returned home with them Saturday.

Rev. Frank B. Smith, Guy W. Landon, E. A. Wanner and Herbert Ludlow attended a Father-Son banquet in the South Park Baptist Church in Port Huron Monday evening when Mr. Smith was guest speaker. His subject was, "Father, the Boy's Example." Mr. Wanner spoke briefly regarding the meeting of the Men's Brotherhood to be held at Forester Park in September.

Mrs. Chester M. Pulford of Burlingame Avenue, Detroit, has announced the engagement of her niece, Alma Isabella Patterson, to Arthur Burgess Mowrey, of Birmingham, son of Mrs. Frank Edward Mowrey, of Outer Drive, and the late Mr. Mowrey. The date of the wedding will be announced later. Miss Patterson is the daughter of Mr. and Mrs. Berkeley Patterson of Cass City.

The next meeting of the Woman's Missionary Society of the Presbyterian Church will be held one week early, and will be on Thursday, June 27, with the following program: Devotionals, Mrs. Pinney; "America and the Refugees," Mrs. Taylor; "To and Fro upon the Land," Mrs. Karr; "Social Service in Action," Mrs. Kilburne; response, "Courage." Hostesses are Mrs. A. S. Milligan and Mrs. Smith.

Mrs. Joseph A. Benkelman attended the wedding of Miss Esther Lowe and Mr. Charles McCulloch in St. Benedict's Church in Highland Park Saturday morning and a reception at the home of the bride's parents, Mr. and Mrs. Patrick Lowe, in the same city in the afternoon. Mrs. Benkelman and the bride's mother were girlhood friends. Mrs. Ben Schwegler and daughters, Mildred and Fern, and Mrs. D. A. Krug accompanied Mrs. Benkelman to Detroit. The group also called on friends during the day, among whom were the William Weldon and Charles Kosanke families, former residents of Cass City.

Mrs. George Ackerman entertained her two nieces, Mrs. Beatrice Shotts and Miss Frances Greenwood, both of Saginaw, on Friday.

Mr. and Mrs. Alfred West and son, Robert, of St. Clair visited the former's parents, Mr. and Mrs. George West, and other relatives here over the week-end.

Mr. and Mrs. Milton Hoffman and family were among several guests who enjoyed a Father's Day dinner Sunday in the home of Mr. Hoffman's father, C. W. Hoffman, at Elkton.

Henry Lang and daughter, Miss Dorothy, of Denver, Colorado, were dinner guests Tuesday in the home of Mr. Lang's nephew, Milton Hoffman. This is their first trip to Michigan.

Miss Mary Belle Young, who was engaged to teach the Mitchell School in Gilford Township the coming year, has resigned to accept a position as instructor in a rural school in Oakland County.

Robert McKenzie of Port Huron spent from Wednesday until Sunday as a guest in the Walter Anthes home. Betty McKenzie, who had been a guest there for two weeks, returned home with her brother Sunday morning.

Vern Gable and his niece, Miss Ruth White, left Tuesday morning for Birmingham and Marshall. At the latter place, they were joined by Mrs. Rogers and the party started on a motor trip of several days to Northern Michigan.

The mothers of the Cradle Roll department of the Baptist Church entertained their husbands and children at a 6:30 supper on the lawn of the Elmer Bearss home on Tuesday evening. Following the supper, a short program was presented.

Howard Taylor, who has been employed at Evanston, Illinois, came Sunday to visit his parents, Mr. and Mrs. R. M. Taylor. Howard will begin work as resident manager of Wells Hall at Michigan State College, East Lansing, on July 1.

Russell Cook and Mr. and Mrs. Ray Lowry and son, Donald, of Plymouth were week-end guests of relatives and friends. Mrs. Cook returned to her home in Plymouth with them after a week spent with her parents, Mr. and Mrs. Fred White.

Miss Phyllis Lenzner of Wayne arrived in Cass City Saturday evening to spend her summer vacation at the home of her parents, Mr. and Mrs. H. F. Lenzner. She will return next fall for her third year as an English teacher in the Wayne High School.

Mr. and Mrs. A. F. Staeb of Ann Arbor were guests at the home of the latter's sister, Mrs. John Dillman, Saturday and Sunday. Mrs. Harriet Boyes and Mr. and Mrs. Robert Dunn of Detroit also visited at the Dillman home and other places in Cass City Sunday.

Among the teachers home for summer vacation are Miss Mildred Karr, who will return to Lansing in the fall and will attend summer school at Mt. Pleasant; Miss Elynora Corpron, who has been teaching in Owosso and will teach in Lansing next year; Miss Marion Milligan, who will return in September to Carsonville for her second year.

In honor of the birthday of Miss Ruth Schenck, a picnic dinner was held Sunday at the Monroe State Park on Lake Erie. Those attending were Mr. and Mrs. Donald Schenck and daughter of Monroe; Mr. and Mrs. Frank Striffler, Dr. and Mrs. Burke Arehart and daughter, Burke, and Mr. and Mrs. John Spangler, all of Detroit; Mr. and Mrs. William McKenzie, Leonard and Miss Gertrude Striffler and Miss Ruth Schenck, all of Cass City.

Harry Tiller and Mrs. H. O. Greenleaf entertained at dinner on Sunday in their home at Millington in honor of the birthday of Mrs. Greenleaf's daughter, Mrs. Charles Walmsley, of Cass City and the birthday of Mr. Tiller's son, Harold Tiller, of Flint. Guests were Mr. and Mrs. Harold Tiller and two daughters of Flint, Mr. and Mrs. James Greenleaf and family of Deford, Mr. and Mrs. Edward Greenleaf, Alex Greenleaf, Mr. and Mrs. Charles Walmsley and son, Frederick, and Miss Betty Oldenburg.

Oscar O'Kelly, octogenarian of Caro, and an early settler of Elkland Township, and Charles S. Seed, publisher of the Rochester Clarion, son of Hugh Seed, Sr., one of the earliest settlers in this community, met in the Chronicle office recently and reminiscing was in order. Mr. O'Kelly's memory naturally encompassed earlier events than that of the publisher, Mr. O'Kelly being a much older man. Charles Seed, many of the older residents will recall, was the community's pioneer commercial milk dealer here. He rang a bell as he approached a customer's house with his one-horse milk wagon. A member of the household, quite often the handsomest daughter, tripped to the roadside with pail, jug, pan or other container for the day's supply. Charles reached his pint dipper down into the large milk can in the wagon and ladled out the required amount. There were few, if any, of the customers of those early days that Charles Seed couldn't call by their first names.

Walter McIntyre has accepted the agency of a Pontiac monument company.

The Woman's Home Missionary Society of the Methodist Church will meet on Thursday afternoon, June 27, with Mrs. Harriet Dodge.

Automobiles driven by C. D. Striffler and Harold Murphy collided at the corner of Maple and Pine Streets Wdnesday morning. Cars were slightly damaged and Mr. Striffler received a few slight cuts on his face.

Echo Chapter, O. E. S., will entertain all the chapters of Tuscola County here next Wednesday evening. Bethany Chapter of Unionville will confer the degrees of the order on four candidates and receive the traveling gavel.

Mrs. Sheldon Peterson entertained a group of friends in her home at Bad Axe Wednesday evening in honor of the birthday of her husband. In the group were three couples from Cass City, Mr. and Mrs. John West, Mr. and Mrs. Albert Gallagher and Mr. and Mrs. Delbert Profit.

Fifteen guests assembled at the home of Mrs. Fred Maier Wednesday when she entertained the group in honor of Mrs. Glenn Folkert. The evening was passed in a social way and a luncheon was served by the hostess. Mrs. Folkert received a gift from her friends. The Folkert family expect to move to Bay City this summer.

The Lee Adams family reunion was held Sunday, June 16, at Lake Pleasant with forty members present. The occasion was also in celebration of the birthdays of the twin sisters, Mrs. Joseph Fulcher and Mrs. Clarence Quick, who are 54 years of age. Two lovely cakes were brought by Mrs. Inze Vanderwalker of Oxford. Guests came from Toledo, Detroit, Wayne, Ortonville, Oxford and Cass City.

Rev. Henry G. Bushong and Mrs. Audley Rawson, representing the Methodist Church as a lay delegate, left here Wednesday to attend the annual Detroit Conference which will be in session in Pontiac until Sunday night when ministerial appointments will be read. It is anticipated by Mr. Bushong and his congregations in Cass City and Bethel that he will be returned as Methodist pastor here.

Although weather reports promised rain, fifteen members of the choir and ushers of the Evangelical Church started an all-day excursion last Thursday. After a picnic dinner at noon, they toured the grounds at the zoo at Royal Oak. Sunshine all day made the outing an especially happy one. Miss Kathryn McTavish of Pleasant Ridge, a former member of the choir, joined the group at the zoo and spent the day with them. Miss Lena Joos remained in Dearborn, where she expects to find work.

Miss Thelma Hunt, an instructor in the Roosevelt High School at Ypsilanti, and Russell Hunt, a teacher in the New Baltimore High School, are spending their summer vacations at the home of their parents, Mr. and Mrs. Harry L. Hunt. Miss Catherine Hunt, another daughter, who is teaching in Trenton, expects to arrive in Cass City next week. All three young people return to the same positions next fall. Miss Betty Hunt, a student at Michigan State College at East Lansing, is also at her parental home here.

Miss Lura DeWitt and Mrs. John M. Reagh spent Thursday in Bay City.

Dr. Burton Pearce of East Lansing was a guest in the Milton Hoffman home on Wednesday and Thursday.

The Woman's Christian Temperance Union will meet with Mrs. Martin McKenzie on Friday, June 28, at 2:30 p. m.

Miss Dora Krapf entertained several ladies at a one o'clock luncheon Wednesday at her home, south of Wickware.

Mrs. Arthur Little had as visitors Wednesday her sister, Mrs. Paul Craig, of Caro and their mother, Mrs. Anna Milner, of Almer.

Mr. and Mrs. Wallace Withey moved Monday from their home on East Main Street to the farm home of Mrs. Withey's daughter, Mrs. J. L. Taylor, at Novesta Corners.

Forty farmers attended the poultry disease meeting on Wednesday morning at the Charles VanHoost farm near Unionville when Dr. E. S. Weisner, poultry pathologist of Michigan State College, autopsied a lot of birds, mostly yearlings brought in which showed symptoms of fowl paralysis, a very serious ailment difficult to control and the cause of which is unknown. He demnostrated the vaccination of pullets for the prevention of fowl pox. This method of prevention is quite necessary to control that disease which is quite prevalent in the northwestern part of Tuscola County.

Revenge-Seeking Insects

Chinese refrain from burning the remains of scorpions, centipedes or similar pests, fearing their dead spirits will hover over the household and cause an invasion of revenge-seeking insects.

Help the War Sufferers

To The American Red Cross:

Inclosed please find.....Dollars for the relief of suffering men, women and children, wounded or made homeless by the war in Europe.

NAME .....

ADDRESS .....

Send your contribution to Mrs. J. Ivan Niergarth, local chairman, or leave it at either bank in Cass City, or the Chronicle Office.

FEW CENTS EXTRA FOR TIGHT WINDOW FRAMES IS GOOD INVESTMENT

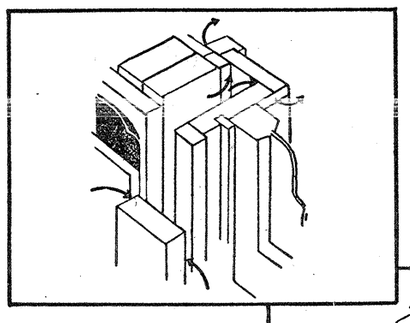

LEAKY JOINT
This is the kind of indifferent window frame construction that is used in many new homes. It results in drafts and dirty walls around windows. Arrows point to where cold air leaks in.

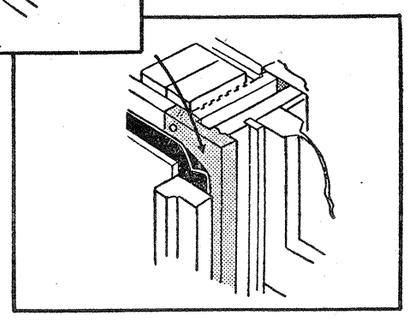

TIGHT JOINT
Contractors call this wide blind stop construction. It cuts air leakage more than half around window frames. Costs just a few cents extra per window. Arrow points to wide blind stop.

Don't overlook the importance of the lowly window frame when you build your new house. It is the one thing that permanently joins your windows with the framework of your house. A window frame properly constructed keeps out dirt and drafts by making a weather-tight joint with the wall. A window frame indifferently constructed will allow as much as 174 cubic feet of air per hour to leak into your home, air that is often loaded with dust, to dirty up walls and cause drafts.

Good Construction Costs Little

Wide blind stop construction in window frames has been in use for many years, yet jerry builders will use frames without it in order to cut costs without regard to consequences. This type of construction costs about 30c to 50c more per window opening than ordinary construction and it will quickly pay for itself in heat saved and added comfort.

Window Frames Permanent

Remember window frames are a permanent part of the wall in your new home. To tear them out and replace them is not only a mess but a big expense as well. The easiest way to avoid leaky window frames in your new home is to buy frames that make a weathertight wall joint and that means wide blind stop construction.

WEDNESDAY'S MARKET AT SANDUSKY YARDS

Good butcher steers and heifers	$ 9.10
Fair to good butcher steers and heifers	8.25 @ 8.75
Common	6.75 @ 7.75
Best beef cows	6.75 @ 7.25
Fair to good beef cows	6.00 @ 6.50
Cutters	5.25 @ 5.75
Canners	4.50 @ 5.10
Medium weight bologna bulls	6.50 @ 6.80
Light common bulls	6.00 @ 6.25
Stock bulls	17.50 @ 45.00
Stockers and feeders	14.00 @ 46.00
Dairy cows	38.00 @ 77.50
Best calves	9.60
Fair to good calves	8.75 @ 9.50
Seconds	7.75 @ 8.50
Culls and commons	6.00 @ 7.50
Deacons	3.25 @ 13.50
Best mixed hogs, 175 to 200 lbs.	5.10
Best mixed hogs, 200 to 225 lbs.	5.10
Best mixed hogs, 225 to 250 lbs.	5.40
Best heavy hogs, 250 to 270 lbs.	5.20
Best heavy hogs, 270 to 300 lbs.	4.85
Best heavy hogs, 300 to 350 lbs.	4.80
Best light hogs, 170 lbs. down	5.05
Roughs	4.35 down
Good spring lambs	10.05
Fair to good lambs	9.00

Sale every Wednesday at 2:00 p. m.
Sandusky Live Stock Sales Co.
—Advertisement.

NEW TURBINE WILL EFFECT SAVING IN PUMPING COSTS

Concluded from first page.

budget for 1940:

Expenditures—	
Sewer labor and supplies	$ 408.00
Street labor and supplies	1,000.00
Black top	1,500.00
Sewer operation	200.00
Waterworks labor and supplies	1,500.00
New pump	2,000.00
Swimming pool	350.00
Nightwatch and marshals	615.00
Village dump	150.00
Truck and grader, repair, oil and gas	450.00
Board of review and election board	18.00
Insurance	350.00
Rest room, council room, Youth's Center	350.00
Health Officer	20.00
Assessor	75.00
Clerk	75.00
Light and power	2,600.00
Fireman and supplies	520.00
Telephone	30.00
Freight	50.00
C. U. Brown	1,260.00
Incidentals	100.00
Printing and advertising	100.00
Bonds and interest	2,600.00
Library—1939 and 1940	300.00
City Park	500.00
	$17,121.00
Receipts—	
Twelve mill tax	$ 9,205.80
Horton Act	3,360.83
Water collections	4,008.59
Liquor tax refund	446.25
Delinquent tax	100.00
	$17,121.47

Disappearing Islands

All the 43,000 inhabitants of Santorin, halfway between Crete and Athens, Greece, were worried recently lest their island sink into the sea as did a neighboring island a few weeks previously. When they looked for the little island one morning it was not to be seen and shortly afterward tiny islets disappeared. The people of Santorin are anxious because it is of volcanic origin, like its neighbors, the volcano being on their island but quiescent. The group was formed by volcanic action about 10 years ago. A great eruption of Santorin volcano occurred 4,000 years ago.

a WORN BELT
On Your
Refrigerator or Washing Machine
COSTS YOU MONEY

When the belt on your refrigerator or washing machine wears and starts to slip, you are paying for wasted power.

A new belt will eliminate this waste.

A replacement for nearly every drive can be made from our complete stocks of

GATES VULCO BELTS for—

Refrigerators — **Water Pumps**
Washing Machines — **Wood Working and**
Stokers and Oil Burners — **Other Machines**

N. Bigelow & Sons

G. B. Dupuis **I. G. A. Store** Phone 149

Specials for June 21 and 22

SUNNY MORN COFFEE ..... 3 lb. can 39¢

I. G. A. Breakfast Cereals ..... any 2 pkgs. 19c
Ask about our Cut-N-Use Curtain Deal
Grape Nuts ..... 2 pkgs. 25c

CERTO, per bottle ..... 19¢

Jar Rings ..... pkg. 4c
Ball Mason Jar Caps ..... 1 doz. 23c

PEANUT BUTTER, 12 ounce jar ..... 15¢

I. G. A. Spinach, No. 2½ Can ..... 2 cans 25c
Swift's Pork and Beans ..... 3 cans 25c
Tomatoes, No 2 Can ..... 3 cans 23c

PARD DOG FOOD ..... 3 cans for 25¢

Soap Grains, 24 Ounce ..... 2 pkgs. 31c
Pastry Flour ..... 5 lb. bag 17c
Palmolive Soap ..... 4 bars 22c

"ENJOY OUR SUPERIOR MEATS"

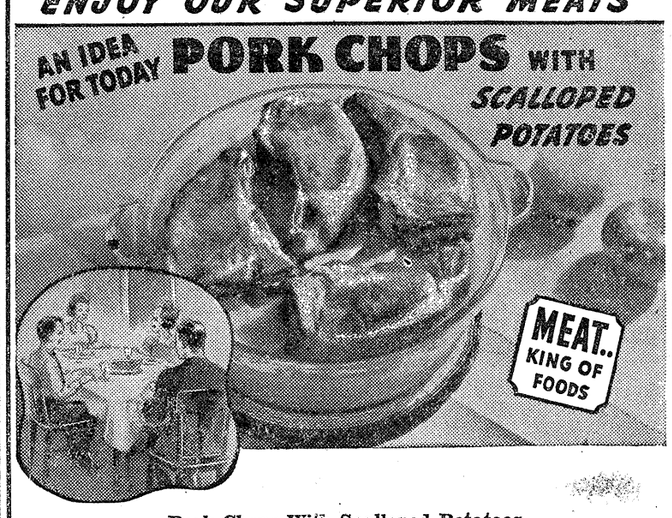

Pork Chops With Scalloped Potatoes

thick pork chops
large potatoes, sliced
Flour for dredging
Milk
Salt and pepper

Brown pork chops on both sides in a hot skillet. Put a layer of sliced potatoes in a buttered baking dish, sprinkle with flour and salt and pepper. Repeat. Add milk until it can be seen through the top layer. Place browned pork chops on top, cover and cook in a moderate oven (350° F.) for about an hour and fifteen minutes, until both potatoes and chops are done.

Buy Tender, Delicious Cuts Here—

Cuts that linger in the memory, and call for more!

Reed & Patterson

TELEPHONE 52 — Dealers in Livestock and Poultry

Chronicle Liners

RATES—Liner of 25 words or less, 25 cents each insertion. Over 25 words, one cent a word for each insertion.

SECOND-HAND grain binder for sale. John W. Ball, 3 east, ¼ south of Cass City. 6-21-1p

BINGHAM School reunion on Saturday, June 29, with potluck dinner at noon. Esther Werdeman, Secretary. 6-21-1p

FOR SALE or trade on cattle, a Belgian stallion, 7 years old and weight 1,900, and a good trailer. John Palmer, ½ mile west of Argyle. 6-14-2p

HOLBROOK Community Club will hold its annual strawberry festival Thursday night, June 27, starting serving at 7:00. 6-21-1

EVERY MONDAY I haul farmers' livestock to Marlette stockyards. I also do local trucking. Ben McAlpine, R1, Gagetown. Seven north, ¼ east of Cass City. 6-17-tf.

FOR SALE—Good five-room one-story house suitable for moving. Clare B. Turner, first house west of Elmwood Store, five miles west, 1 south of Cass City. 6-21-1p.

LITTLE PIGS, six weeks old, for sale. Ernest Beardsley, 4 west, ¾ south of Cass City. 6-21-1

SPECIAL MEETING of Echo Chapter, O. E. S., Wednesday evening, June 26, for the purpose of initiation. 6-21-1

TRY KENNEY'S for some of your groceries, good staple goods and priced right. Kenney's Grocery and Creamery. 10-7-tf

FOUND—Auto license plate RX-15-55. Call at Chronicle Office for same. 6-21-1

STRAWBERRIES for sale. Call at the Peter Kloc farm, 3 miles south of Cass City. 6-21-1p

WANTED—Man to work on farm by the month. Fred Emigh. Phone 154F21. 6-21-1p

WASHINGS and ironings wanted. Work to be done at my home. Reasonable prices. Mrs. Albert Shuman, 4319 West Street. 6-21-1p.

FOR SALE—Will accept bids on the following described lands: The N. ½ of the NW. ¼ of Section 13 containing 80 acres and the NE. ¼ of the SE. ¼ of Section 14 containing 40 acres, Township of Wells. E. J. Kremer, Administrator, Estate of Robert A. Curry, Deceased, Caro, Michigan. 5-24-tf

PRIVATE SALE of furniture, consisting of an upholstered suite, tables, chairs, rugs, secretary, china cupboard, bedsteads, springs and mattresses, dressers, lamps, rockers, door mirror, library tables, wardrobe, lawn mower, health lamp and other articles. Mrs. G. C. Folkert, 1 block north of Ford Garage. 6-21-1p.

WILL HAVE strawberries for sale next week and red and black raspberries in season. Frank McCaslin, 4 south, 2 west of Cass City. Telephone 150F21. 6-21-2p.

I HAUL livestock to Marlette and do all kinds of trucking. Phone 71R2. William Withey, located in Ivan Vader's house, one block south and one-half block west of Ford Garage, Cass City. 4-5-tf.

WANTED—Single man to work on farm. Henry Cooklin, 4½ miles west, ½ south of Deford. 6-21-1p.

IN THE strawberry business as usual. Joy Smith, one block west of Grand Trunk depot. 6-21-1p

FOR SALE—25 acres hay on the field; also trailer house for rent by week or week-end trips. Chauncey Tallman, 8 miles south, ½ mile east of Cass City. 6-21-1

BINGHAM School Reunion—The annual reunion of the Bingham School will be held on Saturday, June 29, beginning at noon. An interesting program has been provided; both old-timers and moderns will take part. Come and visit with your old-time friends and classmates. 'Tis good to relax a little. "A little nonsense now and then is relished by the best of men." Matters of importance will be discussed concerning the future policy of the reunion. We want the opinion of all. A potluck dinner will be served, so don't forget to bring your bit. By order of the Executive Committee. 6-21-1

THREE Exclusive Features in Sunday's Detroit News—A 16-page Color Comic Book, This Week Colorgravure Magazine and America Speaks are three features you get in Michigan only in The Detroit Sunday News. In view of this being election year, it will pay you to read America Speaks and have the facts on how the nation feels about the candidates. Watch for this poll of public opinion next Sunday and every Sunday in The Detroit News. 6-21-1

LOST—Nurse's gold hospital pin with green lettering. Finder please leave same at Chronicle Office. 6-21-1p

FOR SALE—Port Huron separator and oil pull 20-40 tractor. All in good running condition. Clair Profit, 1 east, 5 north of Cass City. 6-21-2p

LAWN MOWERS sharpened—3 blade, 75c; 4 and 5 blade, $1.00. We use a new Ideal grinding machine. Also new and used mowers for sale. Your old mower taken in trade if you wish. West's Welding and Machine Shop. 5-10-tf

20 ACRES of mixed hay to be taken off on shares. See John Morrison, 4 north, 3 east, ½ north of Cass City. 6-21-1p

10 ACRES of alfalfa hay for sale. Mrs. Clara Mayor, 4 miles north and 3½ east of Cass City. 6-21-1

MR. FARMER—We are in the market to buy all kinds of livestock. Call us before you sell. Robert and Jim Milligan. Phone No. 93-F41. 5-28-

FOR SALE—Two Goodyear used tires in good shape. Size 6.00-18. Two blocks north of Elkland Roller Mills and one block east. 6-21-1p.

WHEN YOU have live stock for sale, call Reed & Patterson. Telephone 52, 32 or 228. 4-21-tf

RANGE for sale, burns either coal or wood. Enquire at James Pethers farm, 3 west of Cass City. 6-21-2p

CASH PAID for cream at Kenney's, Cass City.

FOR SALE—Silk and wool mohair davenport. Can be opened into a full size bed. Pad included. Price $10. Mrs. C. J. Rocheleau, ¾ mile west of Gagetown. 6-21-1p.

WANTED—150 old horses for fox feed. Must be alive. Otto Montei, Fairgrove. Caro phone 954-R-5. 11-8-tf.

CASH TALKS!

Prices Down!

Blue Sunoco Gas
6 gals. for 99c

Car Wash, now 50c
Grease Job, now 50c

New Oil, 15c.....now, qt. 10c
Wolf's Head, 36c..now, qt. 31c
Valvoline, 36c.....now, qt. 31c
20c Grade Oil.....now, qt. 15c
25c Sunoco Oil.....now, qt. 21c

TRADE AND SAVE
AT
SUNOCO SERVICE
6-14-2.

STRAWBERRIES for sale. Ready for canning. Joseph Tesho, 2 blocks north, ½ block east of Standard Oil Co. Station. 6-21-1

STRAWBERRIES for sale. Frank Martinek, 6 miles west of Cass City. 6-21-2p

FOR SALE—18 acres of alfalfa hay on the ground. See me Saturday afternoon. Emory Lounsbury. 6-21-1p

FOR SALE—Two cows, fresh, calf by side. Want one fat heifer. Arthur Gerou, 7 miles west of Cass City. 6-21-1p

NOTICE—Double harness, cream separators, oil and gas stoves, ranges, sewing machines, baby cab, good piano, radios and rug. cab, good piano, radios and rugs. Second Hand Store, East Main Street. 6-21-1

SALE—Household furnishings must be sold by Friday evening: Wilton velvet rug, 9x12; Axminster rug, 9x12; double deck coil bed springs, almost new; mattress, good condition; two arm chairs; desk; bookcase; couch. Several pieces of antique furniture, kitchen utensils, etc. Apply at the J. Henry Smith home, corner of Third and Seeger Streets. 6-21-1p

WE SINCERELY wish to thank Mr. Niergarth, Mr. Campbell and all those who helped to make my four years of high school possible. Dale Mc. and His Mother. 6-21-1p

CARD OF THANKS—We wish to express our heartfelt thanks to our many friends and neighbors for the flowers and many acts of kindness extended to us during the illness and death of Harry Dodge. Also to the ministers, Rev. Mr. Sherk, Rev. Mr. Avery and Rev. Mr. Orchard, the singers, Mr. and Mrs. Karr, the pallbearers and Dr. H. T. Donahue. Mrs. Harry Dodge and Jimmie and Mrs. Orth and Mrs. Secord. 6-21-1p.

WANTED—Farms of all sizes. Have ready cash buyers. See me at once. William F. Zemke, Deford. 6-7-4

PIGS, 6 WEEKS OLD, for sale. Also all-glass oak china cupboard. Mrs. Lenard, 5 south, 2 east of Cass City. 6-21-1

STRAWBERRIES for sale. Telephone 57F3. Walter McIntyre. 6-21-1p.

DAY-OLD BREAD for sale. Fried cakes, 7c and 8c a dozen. Razor blades, 3 packages for 25c. Telephone 57F3. Walter McIntyre. 6-21-1p.

SPRAYERS and dusters, 15c and up. Cass City Furniture Store. 6-21-1.

FARMS FOR SALE—40 acres, $1,500; 80 acres, $3,200; 160 acres, $4,500; 200 acres, $6,000; 350 acres, $8,500; 400 acres, $8,000; 900 acres, $16,000. All farms have buildings. For farm bargains, see Dan Hobson, Clifford, Michigan. 6-14-3p

WE BUY poultry, fresh clean eggs and potatoes. Joe Susko, Deford. 6-14-2p

STOCK OF hay car track, rope and pulleys; new kind of rope, wet proof. G. L. Hitchcock. 6-14-2.

DO YOU NEED glasses? The answer is "yes" if you are bothered by constant headaches, burning eyes, easy fatigue. Glasses often cure nervousness. Save your sight! See A. H. Higgins, Optometrist. 6-14-

FOR SALE—100 White Leghorn pullets, 11 weeks old; cow, due in August; and one work horse. Enquire Elkland Roller Mills. 6-21-2.

RESTAURANT for sale, completely equipped, also six furnished sleeping rooms adjoining. Easy terms. Wells Home Cafe, Caro, Michigan. 6-21-1p

WANTED—Girl or woman, experienced in housework, capable of planning and carrying out her work. Reply to Box SJJ, in care of Chronicle, giving qualifications and references, or leave name at Chronicle Office. 6-21-1

FARMERS!

We are paying today for prime poultry:

Rock springers, 4 lbs. and over 21c
Rock broilers, 2½ lbs. and up 18c
Leghorn broilers.... 13c to 15c
Heavy hens 13c
Leghorn hens 11c

WE ALWAYS BUY POULTRY
Phone 145.
Caro Poultry Plant
Caro, Michigan

WILMOT.

Week-end guests at the home of Mr. and Mrs. George Ashcroft were Mr. and Mrs. Wesley Kitchen, Mr. and Mrs. Ernest Johnson, Mr. and Mrs. J. D. Bissett and Mr. and Mrs. Walter Prossor of Wayne, and Miss Vernitta Reamer of Caro.

Mr. and Mrs. Arthur Harmon and three daughters of Flint were week-end guests at the home of Mrs. Harmon's parents, Mr. and Mrs. Alex McArthur.

Sunday callers at the home of Mr. and Mrs. Joseph Schlunz were Mr. and Mrs. Ed Truba of Rochester.

Sunday callers at the home of Mr. and Mrs. George Ashcroft were Mr. and Mrs. M. Randall and daughter of Kingston and Mr. and Mrs. Al Shimmers of Detroit.

Mr. and Mrs. William Lippowiths and daughter, Joan, were week-end guests at the home of Mr. and Mrs. George Kiteley.

A birthday party was held on Saturday night at the home of Mr. and Mrs. George Ashcroft in honor of their daughter, Mrs. William Phillips, of Flint. Lunch was served with a large birthday cake. A good time was had by all.

Mr. and Mrs. Louie Miller of Detroit were week-end guests at the home of the latter's parents, Mr. and Mrs. Charles Ferguson. Mrs. Charles Ferguson is quite ill and has been under a doctor's care for the past few weeks.

Mr. and Mrs. Orla Barrons of Kingson were Monday evening callers a the home of Mr. and Mrs. Joe Barrons.

Arthur Daily and friends of Pontiac were Sunday callers at the home of Mr. and Mrs. William Barrons, Sr.

Miss Violet Wood of Kingston is the new clerk at the E. V. Evans store.

Orla Moulton of Caro called on his parents, Mr. and Mrs. William Moulton, Saturday.

Mr. and Mrs. John Roberts are spending an indefinite time visiting friends in Flint.

Joe Waxell of Detroit was a week-end guest at the home of his parents, Mr. and Mrs. Dan Waxell.

DEFORD

Miss Norma Wentworth of Detroit and Mrs. Arthur Ashley, Mrs. Clarence Wagner and son, John, of Flint were callers Friday of Mrs. G. A. Martin.

Mr. and Mrs. G. A. Martin spent the week-end with their daughters and families in Detroit. Their youngest daughter, Mrs. E. L. Arnold, came home with them for a visit.

Mr. and Mrs. Orlie Simmons and daughter and Mr. and Mrs. John Elley spent Sunday at the home of Mrs. Mary Reid in Wayne.

Thomas Grove is very ill for some weeks with diabetes, and also was the victim of a stroke some time ago. He is now at the home of his sister, Mrs. Babcock.

Mrs. F. W. Towsley and Mr. and Mrs. Glenn Towsley and children were Sunday guests of Mr. and Mrs. J. Budinger in Port Huron.

Chauncey Tallman and William Roth each have a new tractor.

Kenneth Kelley made a business trip on Thursday to Detroit.

Mrs. Ruth Sherman, daughter, Mabel, Mrs. Walter Thompson and Mrs. VanAllen were at Pontiac on Friday. Mrs. Sherman and daughter, Mabel, spent a few days in the city before returning.

Walter Wilkinson was elected as a district delegate of the Townsend Club, to attend the convention to be held June 23 to July 4 in St. Louis, Missouri.

Mr. and Mrs. Leslie Drace were callers in Saginaw on Monday.

Mrs. A. L. Bruce, Mrs. Malcolm and Mrs. K. Kelley were callers on Monday in Saginaw.

Mrs. Horace Murry, accompanying Mr. and Mrs. Murry of Akron, attended the funeral of an aunt in Indianapolis, Indiana, this week.

Mrs. Julius Wentworth was a visitor on Sunday of Mr. and Mrs. Charles Cunningham.

Sunday guests of Mr. and Mrs. William Patch were Mr. and Mrs. William Thomas, and Mr. and Mrs. Leslie Taylor of Royal Oak.

Mr. and Mrs. Floyd Collins and Miss Stella Patch were Tuesday evening callers in Caseville.

Mr. and Mrs. Leslie Taylor have purchased the farm owned by Mrs. Wallace Withey. Mr. and Mrs. Withey will also make their home with them at the farm.

Mr. and Mrs. Warren Churchill were guests of their son and family, Mr. and Mrs. Harold Churchill, of Auburn Heights, and also of Mr. and Mrs. Ira Howey, at Roseville.

Mr. and Mrs. Frank Evo, accompanied by Mr. and Mrs. Don Evo of Wahjamega, spent Sunday at Detroit at the Wayne Evo and Lynn Taylor homes.

Gale McIntyre left Tuesday for Detroit where he will spend a short time with his sister.

Miss Vera Streeter of Caro is visiting at the Joe Susko home.

Mr. and Mrs. Park Wagg of Pontiac were visitors on Thursday at the George McArthur home. Mr. and Mrs. McArthur returned to Pontiac with them and were guests in the city until Wednesday.

Mr. and Mrs. Everett Niles of Detroit were Saturday visitors of Mr. and Mrs. John McArthur. Guests on Sunday were Mr. and Mrs. Charles Henderson.

Mr. and Mrs. A. L. Berg of Cadillac and Mr. and Mrs. Fay Berg of Sebewaing visited at the Riley home on Sunday.

Mrs. Frank Benedict entertained over the week-end her sister, Mrs. Tucker, and a niece and nephew of Detroit. Mrs. Benedict and Mrs. Tucker will spend this week with their brother, Will Ayers, at his cottage at Barn's Lake.

James Bruce of Fairview is spending this week with his sister, Mrs. Sam Sherk.

Clinton Bruce of Sterling was a caller in town Monday.

Gordon Hartwick of Clawson and Mr. and Mrs. Basil Hartwick of Pontiac were week-end guests at the Fred Hartwick home.

Mr. and Mrs. Nelson Hicks and daughters, Donna and Della, of Flint were Sunday visitors of Mr. and Mrs. Lloyd Hicks.

Guests at the Howard Retherford home during the week were Mr. and Mrs. Olin Gibbs of Wyandotte, who came to visit their grandmother, Mrs. Bertha Cooper, Mrs. Arthur Ashley and daughter, Elva, of Flint and Norma Wentworth of Detroit. Shirley Coleman of Pontiac is spending her vacation with her grandparents, Mr. and Mrs. Howard Retherford.

Mrs. Alice Retherford and son, Philip, spent Sunday with Mr. and Mrs. John Princing and Mr. and Mrs. Alvin Siedell of Saginaw.

Mr. and Mrs. Bruce Malcolm and little niece, Marla Ivory, of Detroit spent the week-end at the Howard Malcolm home. Shirley Kelley returned home with them.

Mr. and Mrs. Joe Polheber spent Saturday and Sunday in Detroit.

Charles Kilgore and Simeon Pratt visited Sunday with Mr. and Mrs. Floyd Russell of Detroit. Mrs. Russell returned home with them for a few weeks.

Mr. and Mrs. Cecil Lester announce the arrival of an eight pound girl Thursday, June 13. She will answer to the name of Deloris.

Among those who attended the Withey School reunion on Saturday were Mr. and Mrs. Fred Palmateer of Rochester and Mr. and Mrs. James Holcomb of Auburn Heights. A good time is reported from those attending the reunion.

Mr. and Mrs. Floyd Ross of Flint were Sunday evening guests of Mr. and Mrs. Alton Lewis.

Thirty-five relatives came Sunday with well-filled baskets to celebrate Father's Day and the birthdays of George Spencer and son, Alvah Spencer. They received a number of lovely gifts. Among those present were two great grandsons, Junior Siewert and Michael Bezemek of Bad Axe and a grandniece, Judy Moore, of Cass City.

John Kline spent Saturday night and Sunday with his son, Harry.

Elkland and Elmwood Townline.

Mr. and Mrs. George Walls of East Dayton spent Sunday with Mrs. R. Bearss.

Mr. and Mrs. George Dudenhoffer of Henderson visited relatives and called on old friends in this vicinity over the week-end.

Mr. and Mrs. Preston Karr spent Sunday evening in Caro at the H. Meddaugh home.

Mrs. Elmer Bearss, Mrs. W. Q. Rawson and Audley Rawson attended a family reunion Saturday at Dearborn.

Mr. and Mrs. A. L. Ewald of Pontiac spent the week-end with Mrs. L. Ewald and Mrs. George Seeley.

Mr. and Mrs. Arthur Tracy of Ferndale and Mr. and Mrs. Harry Habicht and daughter, Janet, of Milan spent the week-end at the E. A. Livingston home.

Mr. and Mrs. O. Karr and daughter, Mr. and Mrs. K. Profit and daughter and Mr. and Mrs. Richard Karr spent Sunday at Caseville.

The Mother's group of the Cass City Baptist Church entertained their families at a potluck supper at the Elmer Bearss home Tuesday evening.

A. Anthes and crew are working at Port Sanilac.

For all you know you may be a genius. This test won't prove it one way or another. But just for a little mental relaxation try it. Simply read the question, indicate your choice of answer in the space provided. Check for correctness, then tally your score.

(1) Carrie Chapman Catt is famous because: (a) the CCC camps were named in her honor, (b) she founded the Red Cross, (c) she was the first woman governor of Texas, (d) she was a noted suffragist worker. ☐

(2) Ceylon is: (a) type of beefsteak, (b) British island in the Indian ocean, (c) capital of French-Indo-China, (d) principal city of Peru. ☐

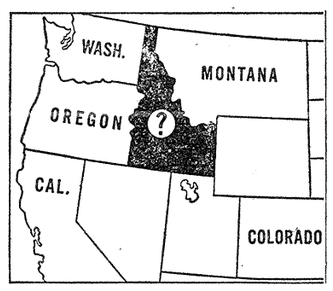

(3) Surely you know that this state is: (a) Wyoming, (b) Idaho, (c) Utah, (d) Nevada, (e) North Dakota. ☐

(4) 19th Amendment to the U. S. Constitution: (a) gives nation-wide suffrage to women, (b) authorizes federal income taxes, (c) abolishes child labor, (d) establishes the petunia as the U. S. national flower. ☐

(5) *Mark this statement true or false:* "Older than the U. S. Constitution is New York's state constitution." ☐

(6) Baseball's immortal George Herman Ruth set a world's record for major league home runs in 1927 by clouting 4-base hits totaling: (a) 50, (b) 39, (c) 60, (d) 56. ☐

(7) Scientific names for the Northern Lights is: (a) blitzkrieg, (b) cosmic nebulae, (c) aurora borealis, (d) H_2O. ☐

Answers on page eight.

Cane Cutter Rabbits

Cane cutter rabbits, common to the southern gulf states, have appeared as far north as South Carolina where generally only the cotton tail and common swamp rabbits are found.

Notice of Hearing Claims Before Court—
State of Michigan, the Probate Court for the County of Tuscola.
In the matter of the
Estate of Ruth E. Lounsbury, Deceased.

Notice is hereby given that two months from the 21st day of June, A. D. 1940, have been allowed for creditors to present their claims against said deceased to said court for examination and adjustment, and that all creditors of said deceased are required to present their claims to said court, at the probate office, in the Village of Caro, in said county, on or before the 21st day of August, A. D. 1940, and that said claims will be heard by said court on Friday, the 23rd day of August, A. D. 1940, at ten o'clock in the forenoon.

Dated June 18, A. D. 1940.

H. WALTER COOPER, Judge of Probate. 6-21-3

WICKWARE.

Mr. and Mrs. Clayton Hartwick and son, Elwyn, spent the week-end at the home of Mr. and Mrs. Elmer Ball of Lapeer, and on Sunday, Mr. and Mrs. Ball and Mr. and Mrs. Clayton Hartwick and son and Mr. and Mrs. John Young and family spent the day at the I. M. A. Park at Potter's Lake.

Mr. and Mrs. Harold Hendrick and son of Wickware, who attended the Lee Adams reunion at Lake Pleasant Sunday, also called at the home of Mr. and Mrs. Elmer Ball of Lapeer Sunday evening.

1940 Grain Loan Rates Announced

The Tuscola County basic wheat loan rate for farm storage of the 1940 crop will be 71 cents per bushel on Red Winter, Hard Winter, and Soft White Winter, grading No. 2, with a maximum moisture content of 14 per cent. Wheat loans will be available to wheat producers who are in compliance with their 1940 wheat acreage allotments under the AAA farm program.

This is the report made this week by John M. Reagh, chairman of the Tuscola County Agricultural Conservation Committee.

The loan value on mixed wheat or wheat with a moisture content of between 14 and 14½ per cent will be two cents per bushel below the established rate, while the rate on smutty and garlicky wheat will range from three to six cents less than the 71 cent basic rate.

Rye and barley producers will be eligible for commodity loans on these crops, if they have planted within their 1940 total soil-depleting allotments under the AAA farm program. The rye loan will be available on farm-stored rye grading No. 2 or better, or grading No. 3 solely on the basis of test weight. The loan rate, as was the case last year, will vary with the 1940 loan rate for 1940 Soft Winter Wheat. Similarly, the rye loan rate will be 22 cents less than the applicable 1940 wheat loan rate, but not more than 38 cents per bushel.

On barley, loan rates made on the basis of farm storage will be: No. 1 at 35 cents a bushel; No. 2 at 34 cents; No. 3 at 32 cents; No. 4 at 29 cents; and No. 5 at 25 cents. A discount of two cents a bushel will be made for mixed barley. Tough, stained, blighted, smutty, garlicky, weevily, ergoty or bleached barley will not be eligible for loans.

Loans on all three commodities, if in farm storage, will mature 10 months from their respective dates, or may be called on a demand basis, if the Commodity Credit Corporation decides world conditions warrant their being called before maturity. Loans on wheat stored in approved warehouses mature in eight months, or on April 30, 1941, whichever is earlier. These loans are also on a demand basis.

JUSTICE COURT.

Walter DeSute, 23; John DeSute, 28; and Peter DeSute, 21, all of Caro, were arrested at the Van-Winkle Tavern near Caro Saturday night, charged with beating up the manager, Lee Hinton. Each man furnished bonds of $100 each to appear in justice court Friday.

Floyd Siebert, 22, of Clifford was arrested at the Shay Lake dance hall on Saturday on a disorderly charge. In Justice St. Mary's court, he was given his choice of paying fine and costs of $26.85, or serving a 90-day jail sentence.

On June 13, Ewald J. Schultz, 42, of Lansing was arrested in Reese on a drunk and disorderly charge. Justice Frank St. Mary gave him a 30-day sentence.

Mike Worbel, 63, of Cass City was arrested June 14 by Deputy Sheriff Wilson on a disorderly charge. In justice court, he was given a choice of paying $10.35 costs or seving 30 days. He paid.

Latest Prospector Wrinkle

The sand beneath a newsstand razed recently at Lakeland, Fla., yielded two youthful prospectors, a boy and a girl, $5 in nickels, dimes and quarters. The boy shoveled the sand and the girl sifted it through a wire screen.

CASS CITY MARKETS.

June 20, 1940.

Buying price—
First column, price at farm; second column, price delivered at elevator.

Grain.		
Wheat, No. 2, mixed, bu.	.70	.72
Oats, bushel	.29	.30
Barley, cwt.	.87	.90
Rye, bushel	.33	.35
Buckwheat, cwt.	1.12	1.15
Shelled Corn, bushel	.62	.64
Beans.		
Michigan Navy Beans, cwt.		2.80
Light Cranberries, cwt.		2.60
Dark Cranberries, cwt.		2.00
Light Red Kidney Beans, cwt.		3.60
Dark Red Kidney Beans, cwt.		5.55
Produce.		
Butterfat, pound		.26
Butter, pound		.26
Eggs, dozen		.12
Livestock.		
Cattle, pound	.05	.07
Calves, pound		.08½
Hogs, pound		.04½
Poultry.		
Hens, pound	.09	.12
Stags, pound		.08
Rock Broilers, 3½ lbs. and up		.20
Rock Broilers, under 3½ lbs.		.15
Leghorn Broilers, 2 lbs. and up		.13
Leghorn Broilers, under 2 lbs.		.12

HORSE RACES
Davison, Michigan
SUNDAY, JUNE 23—2:00 O'Clock

30 Pace or Trot.....$100.00 Purses
20 Pace or Trot.....$100.00 Purses
15 Pace or Trot.....$100.00 Purses
Adults, 50c Children, 25c

Moved

To our new location in the Folkert building

First door west of Cass City State Bank

AUTHORIZED AGENCY
GAMBLE STORES
INDIVIDUALLY OWNED AND OPERATED

Today Is a Good Day

to renew your subscription to The Cass City Chronicle for another year. If not convenient to do so today, of course tomorrow or the next day is also a good time to do so. It all helps to keep "the records straight."

WEEKLY NEWS ANALYSIS By Farnham F. Dudgeon

French Government Asks Peace After Reynaud Cabinet Resigns; England Pledges 'We'll Fight On'

(EDITOR'S NOTE—When opinions are expressed in these columns, they are those of the news analyst and not necessarily of this newspaper.)

Released by Western Newspaper Union.

When Italy joined forces with Germany in the war against France and England she had a good supply of armored tanks to aid in clearing the way for troops in true blitzkrieg fashion. Here are pictured a number of Mussolini's soldiers manning the best tanks Italy has been able to produce. In addition to these "regular" tanks, the Italian army is said to possess a large number of the "flame-throwing" variety.

THE WAR:
Capitulation

"Our race does not allow itself to be beaten down by invasion . . . Our race has always thrown back or dominated the invaders . . ." Brave words these, spoken by Premier Reynaud of France as he was telling his people of his "last" appeal for help to President Roosevelt.

But within four days following this desperate plea, Paul Reynaud resigned his post as premier of France's "war" cabinet and was replaced by 84-year-old Marshal Henri Petain, to whom fell the fateful job of arranging a "peace with honor."

France, weary and tired under the constant pounding of the relentless German blitzkrieg, had decided to concede defeat in order to save what was left of the country from the invaders.

Premier Petain's cabinet began its negotiations to end the war through Generalissimo Franco of Spain—a friend of both Petain and Hitler.

Even before this grave news reached London the British had pledged themselves to continue the war even if France should find it necessary to cease firing. Great Britain declared that Germany had used up her resources in too great a hurry and unless she was able to conquer the allies within a few months all chance of a German victory would vanish.

Russia meanwhile had stepped into the picture and assumed "protection" over Lithuania because, according to the Soviet, that tiny nation was busy obtaining Russian military secrets that were "threatening peace." It was also claimed that the Liths had entered into a military alliance with their small neighbors, Estonia and Latvia. So Russian troops marched into these two nations, as well.

Before the French decision to seek peace had been made, German troops had entered Paris and the swastika was unfurled on the streets of that historic city. The French had cleared the city of soldiers before the Germans arrived so that it could be classed as an "open city" and thus be spared destruction by bombing or shell fire. The high command explained that no worthwhile strategic aim would justify destruction of their beautiful capital, almost sure to result in any battle to defend it.

HOME FRONT:
Big Job

In a machine age war world, with dive-bombers, flaming tanks, and motorized equipment of all types, industrial mobilization of national resources takes precedence over manpower mobilization.

Germany's swift thrusts into enemy territory stand as evidence that while France and England idly watched, Nazi factories were working overtime turning out their mechanical instruments of war.

Allied leaders themselves are admitting these days that it was this lack of a unified industrial production program that left them so far behind Germany when the war began.

Evidently the United States does not intend to be caught napping in a similar fashion, should this nation be called upon to defend its shores against invasion. For the $5,000,000,000 preparedness program is moving along with increasing smoothness and speed.

The President's defense commission, co-operating with government agencies, has increased the tempo of its program to aid in this mobilization.

From Detroit, likely to be the key point for the mass production of war planes, came news that after Henry Ford and his engineers had inspected two planes sent them by the war department, he announced that his statement of being able to produce 1,000 ships a day, still stood. It was further stated that given six months notice Ford could turn out this many planes without interruption to normal output of automobiles. Ford emphasized in an interview that any planes he produced would be "for defense only."

Paying the Bill

Secretary of the Treasury Morgenthau believes that the public is "willing and ready" to accept additional taxes to support the defense program. Most tax experts agreed with him but many cautioned that a hurried revenue bill rushed through congress would have to be reviewed and studied later to see that the tax was distributed fairly among all income groups.

POLITICS:
Now Is the Time

Opening their national convention in Philadelphia the Republican party faces a difficult task indeed. From its ranks it must pick a presidential candidate that will first of all be able in some manner to match the experience in international affairs that the Democratic party can present to the U. S. voting population in its candidate.

For war or peace, preparedness or lack of it, the foreign situation is to be the biggest factor in the 1940 political campaign. Both major political parties realize this and many domestic issues, truly important ones, may be neglected because of it. And with knowing this they are concentrating on choosing a standard bearer that will give the American public full confidence that if elected he will be successful in pursuing a wise foreign policy.

INDUSTRY:
Upturn

Since last December, American business has been following a downward trend but now the picture is changing and according to recent reports of the federal reserve board this trend has been suddenly reversed.

Government economists and Secretary of Commerce Harry L. Hopkins believe that domestic business activity will increase enough (due to the multi-billion dollar defense program) to more than offset losses in international trade due to invasion of many of Uncle Sam's good customers in Europe.

Not only have the so-called war industries (machinery, aircraft, shipbuilding and chemicals) evidenced nice gains recently, but other industrial fields not directly related to armed conflict have increased their activity. Outstanding among these other industries are: meatpacking, rayon production, petroleum output and coal production.

But the greatest increase in volume of business is in production of steel. Marked increase in orders for foreign buyers and domestic manufacturing plants are pushing steel plants up to capacity.

HEADLINERS

¶ **Gov. Luren Dickinson** of Michigan removed **Thomas C. Wilcox** as sheriff of Wayne (Detroit) county after hearing charges that the sheriff received a "cut" in a vice and gambling payoff.

¶ Norway's ruler, **King Haakon VII,** finally left his country's shores, taking his government with him to England.

¶ Former Governor of Louisiana, **Richard W. Leche,** was given a 10-year federal prison sentence for using the mails to defraud.

¶ Arriving safe in Canada, **Princess Juliana** of The Netherlands and her two infant children plan to live in the dominion until the end of the war.

Advertise it in the Chronicle.

'Marked Men'

A historic spot where American doughboys fought in the Argonne district of France is marked by this stone—it was "marked" in another fashion in World War II. A German aerial bomb scored a hit, shattering the monument.

AGRICULTURE:
Record Reserve

Department of agriculture reports indicate that ever-normal granary reserve supplies of surplus farm products have reached record levels and will be increased this year.

This reserve supply held by the Commodity Credit corporation under loans to producers or owned outright by the corporation has a total value of about $1,000,000,000.

Chief crops in reserve are cotton, corn, wheat and tobacco. Smaller amounts of peanuts, figs, butter, wool, mohair, turpentine and resin are held because of loans made last year. This year, loans averaging 64 cents per bushel on 1940 wheat, 35 cents on rye, and 30 cents on barley have already been authorized and loans are virtually certain on 1940 cotton (9 cents per pound) and corn (between 57 and 62 cents per bushel).

While farm prices are at a low ebb because of the loss of many foreign markets due to the war there is a feeling in some quarters that it may become necessary for the Americas to eventually supply most of the foodstuffs for European nations.

It is known that generally speaking these nations do not have huge supplies of food and will be forced to get huge stocks of grain from somewhere.

But the situation is so uncertain that the farmer who takes a gamble on getting in on some of the "extra-eventual" trade may be left holding a full grain sack.

MEDICINE:
New Trend

Arch foe of any attempt to "federalize" or centralize authority in control of the practice of medicine, the American Medical association is now about ready to make available to the public a system or systems of statewide medical care at low cost.

Details of the plan to be presented are not immediately available but it is known that prepayments to cover sickness promise to run from $1.50 to $2.50 per month per individual.

Opposition to any compulsory health insurance plan was expressed by leaders of the association.

Meeting in annual conclave in New York, the A. M. A. house of delegates heard reports on the results of experiments by 300 county societies all over the country in joining with relief authorities to provide medical service to the indigent. The new plan, which will be an outgrowth of these experiments, does not limit its service to the indigent but will be available for all to whom low cost is essential.

At least 14 states already have a statewide plan in some stage of development.

EAST SIDE:
Accord and Discord

On the world's troublesome east side where eyes of the western world are cast in never-ending vigilance there are some signs of accord . . . and added signs of the usual discord.

For from Tokyo comes word that Japan and Thailand (Siam) have concluded a treaty of friendship, which a foreign office spokesman described as "unmistakable evidence of Japan's peaceable intentions in the South Pacific."

And in London the British reported a non-aggression pact between Thailand, Japan and Great Britain as well as a partial settlement of an old dispute with Japan on the matter of money circulation in China and the prolonged silver dispute in the city of Tientsin.

If all this sounded as if Great Britain's campaign to woo Japan's friendship was bearing fruit, there were more ominous sounds droning from the motors of Japanese bombers over China's provisional capital, Chungking. For the Japanese air force has been concentrating its attacks these past weeks in an effort to destroy that city and force the government officials to surrender.

Outside of China the Japanese seem to be in a mellow mood for even from Moscow came news of accord with Russia in the Soviet-Mongolian border dispute.

Michigan Mirror
Non-Partisan News Letter

Lansing—The shadow of labor discord has appeared again in Michigan.

Coming at a crucial time when the United States government is leaning heavily upon our industrial plants for armament, a threat at production output could easily become a national affair.

The situation is something like this:

(1) The C. I. O. is fearful that industrialists may seize upon the preparedness issue as a pretext to deny them the "right" of higher wages—and the "right" to strike for them.

(2) Industrialists recall the activity of communists in the 1937 sit-down strike, and they insist that unions shall give a five-day notice of strike only as a last resort in negotiating grievances. They want authority also to dismiss employees, alien or otherwise, whom they believe to be involved in sabotage.

(3) Commissioner Oscar G. Olander of the state police says 100 additional men are needed to investigate "hundreds of reports of subversive activities in this state." While Olander did not divulge where the additional men would be detailed, it is understood that officials are apprehensive that sabotage may hinder production of important war orders.

(4) And, this being a democracy, don't forget this one: National and state elections are due to be held next November. That means votes and lots of them.

Dictatorship

With the European war possibly coming to our shores (this is believed inevitable should England move its capital to Canada), Michigan's automobile plants occupy key positions in the national defense of the United States.

Our involvement in the war would probably evoke a war-time dictatorship. Rights of management and labor could be limited drastically by federal decree, all in the interest of national security.

Hence the peace-time actions of industrial labor leaders and workers in the rank and file may prevent or invite stern war-time regulation.

The alternative would be to risk the price paid by France where production of necessary war supplies even two years ago was insufficient to meet urgent needs of national defense. In a remarkable report to the president of the French Republic on November 12, 1938, MM. Deladier and Reynaud declared:

"The gravest failure, from which the others follow, has been the persistently low level of production. . . . If production is insufficient it is primarily because its possibilities of development have been paralyzed.

"The idea of a reduction in the length of the working day had been entertained on the assumption that, as a result of increased efficiency of labor and more intensive use of machinery, the same output could be obtained with fewer hours of work.

"But the efficiency of labor has not increased and the hopes founded on technical improvement have not been realized. How could it have been otherwise, when the majority of factories and shops were closed two days out of seven?"

Joint Responsibility

In this new period of national emergency—and signs already point that it has arrived—special responsibilities rest upon management, capital and labor.

Mr. Reynaud, co-author of the 1938 report, is now Premier of France.

Like Winston Churchill, he is bearing a heavy task of trying to overcome the dreadful waste and lost time in the years prior to the war.

In the light of French experience, it is clear that every element of our population may be called upon for new sacrifices—perhaps by longer working hours, perhaps by heavier taxes, and perhaps by postponing the satisfaction of former wants in favor of present wants of a more urgent nature.

In a democracy such as the United States and in a state of advanced technological development such as Michigan, the challenge of 1940 is whether we can solve the problem of defense as efficiently as a totalitarian state. Cooperation of capital and labor will be put to a new test. Upon the success or failure of this teamwork depends the security of millions.

Ford, Peace Apostle

Henry Ford, America's outstanding genius of mass production, financed a "peace ship" to Europe in 1916.

When this nation entered the conflict, Ford swung his huge plants into the manufacture of tanks, submarine chasers and ambulances.

Still an apostle of peace, the Dearborn manufacturer a few weeks ago received world-wide attention when he declared in an interview that the Ford organization could produce 1,000 airplanes a day through mass production methods "if" he were guaranteed of no governmental "meddling"—presumably by the National Labor Relations Board.

The army department rushed one of its latest models to Dearborn for Ford engineers to examine.

Because Ford's management policies have always been liberal to labor, the C. I. O. has been unsuccessful to date in efforts to unionize Michigan plants. How popular the automobile maker is with labor was revealed recently by a Gallup public opinion survey which placed him high up on the list—along with John L. Lewis!

CCC Youths

Non-combatant military training in the CCC camps in Michigan appeared to be a probability as Congress rushes plans to integrate federal relief and national defense.

The youths would not be trained with guns for military combat, but they would be given instruction in bridge and road construction, cooking, first aid, radio, photography and mechanical work. The camps may help to train young men for industrial employment in an effort to break the present bottleneck due to lack of machines and skilled machinists.

The NYA camp at Cassidy Lake (between Ann Arbor and Jackson) is already training young men in vocational fields such as aviation and automobile engineering.

Michigan national guardsmen will train this summer at Sparta, Wisconsin, and at Grayling. The CCC camps would "prove valuable assets in case of mobilization," it was stated at Washington by General George C. Marshall, army chief of staff.

G-Men in Michigan

Federal investigators of the department of justice have developed leads in Michigan "as challenging as those we received in Louisiana," so admitted O. John Rogge, assistant United State attorney general, in Detroit.

The Louisiana inquiry consumed eleven months before the lid blew off.

The Associated Press intimated that the federal grand jury was looking into charges of graft in connection with liquor dealings.

After Wayne County's mess involving the sheriff, prosecuting attorney, and a couple score of policemen, the prospect of a Louisiana-style scandal being uncovered in Michigan fairly takes your breath.

The Washington probe may end in indictments of a startling nature.

Doctor Townsend Says .....

NEVER in our history, not even during the disastrous depression years, has real democracy been so needed as in the critical days to come. True democracy is effective only when the electorate is informed on national and international affairs. Confusion in the minds of the people may cause confusion among our representatives in Washington. They must be able to act decisively according to the wishes of the citizens.

Our national problems, which have not been solved, must not be overshadowed by international conditions, and we should be able to cope with both situations equally well. With this double task ahead it behooves each citizen to be informed on the serious problems of government and to communicate often with his representatives in Washington.

Plumbing and Heating

Eavetroughing and Sheet Metal Work

Myers & Deming Water Systems

Ideal Plumbing and Heating Co.

Cass City, Mich.

USE MICHIGAN MADE BEET SUGAR

IT HAS NO SUPERIOR!

Every Michigan housewife should use Michigan Made Beet Sugar.

Talk to your local grocer. See that he carries this home product.

Buy one of these quality brands:

PIONEER GREAT LAKES BIG CHIEF

HOUSEWIFE'S FAVORITE RED ARROW

Building a New Home?

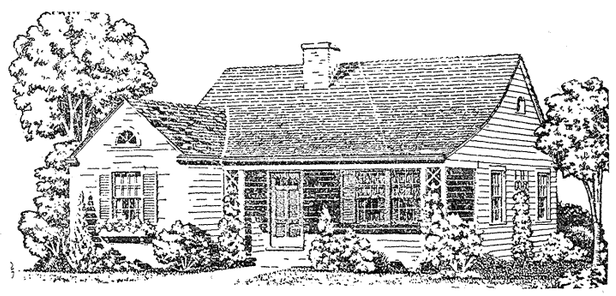

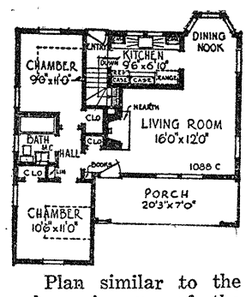

Plan similar to the above is one of the many house plans available at no extra charge. These homes represent the most modern innovations in planning, construction and equipment.

We have hundreds of house plans!

If you're planning to build a new home, repair or remodel, we will be glad to offer constructive ideas as to plans, materials and financing. Remember, too, labor and material costs are DOWN this year. So don't delay—take advantage of definite savings—Build this Spring! Call for free estimates.

A home similar to the above plan can be built on your lot complete for approximately $25.00 per month under F. H. A. financing.

A COMPLETE BUILDING SERVICE

Lumber Plaster

Brick and Lime Cement

Insulation Wool Roofing

Building Hardware Paint

See us for complete building service

The Farm Produce Co.

Lumber Department

Cass City 3 BIG NIGHTS STARTING **Mon., June 24**

Tent Located at Entrance of Fairgrounds

THE SHOW WITH A MILLION FRIENDS

JACK KELLY'S

BIG TENT SHOW

All New This Year - Bigger Than Ever

Big Vaudeville Features - Special Orchestra

Don't Miss Our Opening Play

Prices Adults 35c Kiddies 10c

LADIES FREE One Lady Free with Each Paid Adult Ticket Monday Night.

Directory.

B. H. STARMANN, M. D.
Physician and Surgeon.
Hours—Daily, 9:00 to 5:00. Wednesday and Saturday evenings, 7:30-9:30. Other times by appointment. Phones—Office 189R2, Home 189R3.

MORRIS HOSPITAL.
F. L. MORRIS, M. D.
Office hours, 1-4 and 7-9 p. m.
Phone 62R2.

H. THERON DONAHUE, M. D.
Physician and Surgeon.
X-Ray. Eyes Examined.
Phones: Office, 96; Residence, 69.

K. I. MacRAE, D. O.
Osteopathic Physician and Surgeon
Half block east of Chronicle Office.
Phone 226.

E. T. AITKEN, D. C.
CHIROPRACTOR.
Hours:
2 to 8 Tuesday and Saturday.
Office in home of W. I. Moore, 4391 Seeger St., Cass City

DENTISTRY.
I. A. FRITZ AND E. C. FRITZ.
Office over Mac & Scotty Drug Store. We solicit your patronage when in need of work.

P. A. SCHENCK, D. D. S.
Dentist.
Graduate of the University of Michigan. Office in Sheridan Bldg., Cass City, Michigan.

A. McPHAIL.
Funeral Director.
Lady assistant.
Phone No. 182. Cass City.

E. W. DOUGLAS.
Funeral Director.
Lady assistant. Ambulance service.
Phone 188R3.

CASH
For Dead and Disabled
HORSES $1.00
CATTLE $1.00
Free service on small animals.
Phone Collect—Cass City 207
DARLING & COMPANY
Successors to
Millenbach Brothers Co.
The Original Company to Pay for Dead Stock

SNELLING'S
Attention Dog Owners
Readi-Cooked
DOG FOOD
End your worries about the health of your dog. Start feeding Snelling's Dog Food and never change. Makes your dog healthy, sleek, and full of pep. One pound is equal in food value to three cans of dog food. Ask your grocer for a sack.
(Distributor)
The Fruit House, Bay City, Mich.
401 Eleventh St. Phone 699

We Pay Top Market Prices for Dead Animals
HORSES $1.00
CATTLE $1.00
PROMPT SERVICE
Valley Chemical Company
Call Collect Caro 210

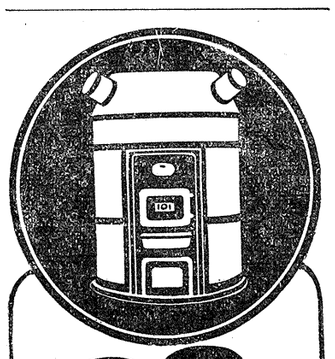
$28 and up
Complete with hood and casing. Pipes and Registers ½ price; also BOILERS, STOKERS and PARTS.
INSTALLATIONS REASONABLE
Lowest Prices in Michigan
Cook Furnace Exch.
TOWNSEND 8-6467
2065 8 Mile, Just East of Woodward

READ THE AD$
Along With the News

Diet Important To Victim of Stomach Ulcer

By DR. JAMES W. BARTON
(Released by Western Newspaper Union.)

TODAY'S HEALTH COLUMN

IT IS known that more than one in every 20 adults has an ulcer of the stomach or first part of the small intestine. Many are not aware that the fullness, pain or distress that comes on two to three hours after eating is due to a little erosion or break in the lining wall of the stomach or intestine. They simply go on a "soft" or liquid diet for two or three weeks, the ulcer heals, and it remains healed if they do two things: (a) Avoid rough foods, and (b) avoid emotional disturbances.

In the Mayo clinic number of the Medical Clinics of North America, Dr. Carl G. Morlock says:

"It is now recognized that in dealing with an ulcer-bearing type of individual who in many instances has inherited this ulcer-bearing or ulcer-growing tendency. Because of this peculiar tendency to the development of ulcer in some patients one sees stomach ulcer occur in the same stomach from which an ulcer has been previously removed by surgery, and one sees ulcers of the intestine in a patient who has had his stomach and intestinal ulcers removed."

Dr. Barton

Regrowth Not Inevitable.

However, the fact that the individual had parents who grew ulcers or he has grown an ulcer himself does not mean that he is bound to grow another.

"When an ulcer has healed over, duty to the patient is only half done. He should be made to understand that he still has the tendency to grow an ulcer and that there will always remain the danger of the old ulcer returning or a new ulcer starting. Any infection—teeth, tonsils, gall bladder—must be removed. The patient must learn to eat slowly and chew thoroughly. Salads, raw apples, cabbage, nuts, vegetables, cheese, tough meats and new breads, alcohol, strong coffee, unripe fruit, vinegar, mustard, pepper, very hot and cold drinks should be avoided."

Finally, keeping mind and body relaxed and trying to avoid anger or other "wearing" emotion is an important factor in preventing stomach or intestinal ulcer.

* * *

Heat Instrumental In Relieving Pain

WHEN you are suffering severe pain from rheumatism, arthritis or neuralgia you are likely to reach for the strongest pain-killing drug except morphine, which you wisely refuse to use. Most physicians believe that while searching for the cause of your pain there is less harm to the body by using a pain-killing drug than trying to withstand a pain that wracks your mind and body.

In speaking of neuritis—the severe rheumatic pain due to organisms or products manufactured by organisms—Dr. Richard Kovacs, New York, in New York State Journal of Medicine, states that general heat measures—electric cabinet baths, hot baths—should be used because they speed up the body processes and increase the rate at which the poisons are removed.

Heating Action Twofold.

"Mild local heating is the main standby to give relief from pain. Its action is twofold because it not only brings about direct quieting of the nerve endings but also relieves or relaxes the adjoinng muscles which are in a state of spasm as they try to protect the damaged part (joints, tendons)." It is this continuous spasm or tenseness that helps to cause so much pain.

In addition to heat other "physical" measures used are massage to improve the nutrition of the part (brings blood to part faster and removes wastes), to prevent thickening of the tissues affected and to prevent wasting of the muscles. Passive exercises (part is moved by the attendant, not by the patient) to prevent deformity and shortening and growing together of the ends of the joints; active exercise and hot applications to keep the unparalyzed muscles in good condition.

Heat in any form relieves pain.

* * *

QUESTION BOX

Q.—What would cause pain in the stomach immediately after eating?

A.—Eating hurriedly or when one is tired might be the cause. If you are losing weight it is advisable for you to see your physician.

Q.—Is there any cure for leukemia?

A.—There is no known cure for leukemia, or persistent increase of white corpuscles in the blood. Blood transfusions help temporarily.

BRINGING UP BASS

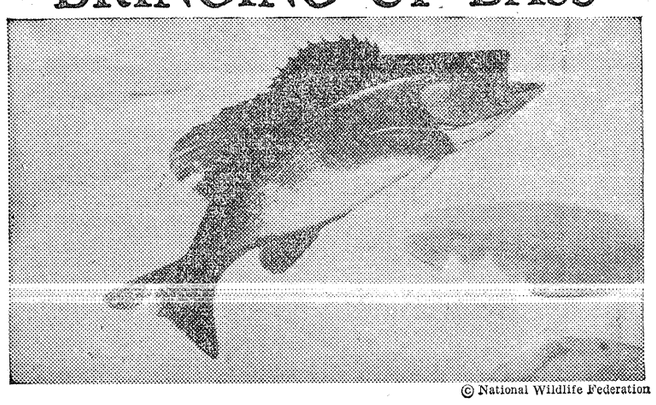
© National Wildlife Federation

The supply of Smallmouth Black Bass has dwindled in the past few years, but the National Wildlife Federation which uses this fellow on one of its new 1940 Poster Stamps, assures us that state and federal agencies are heeding anglers' complaints.

At Leetown, West Virginia, the Bureau of Fisheries conducts one of its most up-to-date hatcheries. Here the bass spawn in specially constructed nests, and when the fry sit up and take a little nourishment they feed on cottonseed meal and minnows, supplied by Uncle Sam. From May, when they hatch, until September, when they are seined out and distributed, the scrappy little fish live the life of Reilly — but then they must fend for themselves in their new homes. However, as any fisherman will tell you, the Smallmouth Black Bass is a tough fighter, so with government help, and the protection of state laws, he is likely to tempt the Izaak Waltons for many a year to come.

25 AND 35 YEARS Ago This Was News

Twenty-five Years Ago.
June 25, 1915.

Eighteen members of the senior class of the Cass City High School were graduated last night. Members of the class are Dougald Duncanson, Otis Stockmeyer, James Hamilton, Paul Fritz, Howard Hoadley, Hazen Carson, Helen McGregory, Beatrice Koepfgen, Mary Flynn, Alison Spence, Vina McPhail, Helen Kolb, Mae Benkelman, Alma Mark, Lottie Hamilton, Ruth Bittner, Ruth Fritz and Florence Bigelow.

Two hundred men participated in a road bee held in seven districts near Cass City Tuesday and they loaded, hauled and spread 541 loads of gravel. Cass City furnished 60 men to shovel gravel, 93 farmers furnished teams and drivers, 18 men spread the gravel on the highway and 30 more farmers or their helpers assisted in loading in the gravel pits. On the basis of counting 10 feet of road improved to every load of gravel hauled, over a mile of highway was bettered Tuesday.

Morley C. Wickware has purchased stock in the Montana State Bank at Valier, Montana, and is in charge of that institution as cashier.

Gagetown High School has one graduate this year, John Coots.

Owen Spencer has purchased the auto repair business of M. A. Fordyce and has moved his shop to the Doerr Garage on West Main Street.

Thirty-five Years Ago.
June 23, 1915.

Two young men of this community were drowned while bathing Sunday. Fred Dilman, son of James Dilman, lost his life in Cass River near the Deming farm, while bathing with a group of young men. Archie Duffield, son of Mr. and Mrs. John Duffield, of Greenleaf Township, met his death in the "Dead Waters" of the Cass River, nine miles northeast of Cass City. He and several others young men were in bathing when he was seized with cramps and was drowned before assistance reached him.

The Misses Hattie Malam and Mabelle Moss left this morning for their homes in Rockford and Millington, having completed the year's work as instructors in the public school here.

Berkeley Patterson and Louis Usher, who have spent the past few days with relatives here, left Wednesday morning for King's Park, Long Island, New York, where they have secured positions in a hospital.

Governor Warner's reports from the cyclone-swept district in the Thumb of Michigan have been tabulated and they show that the following buildings have been destroyed: Forty-two houses including those unroofed or damaged to an extent requiring rebuilding; three schools valued at about $900 each; two churches, valued at $960 and $1,100; 82 barns, not including small outbuildings; 24 miles of fence, about half wire and half rail.

Government Employed Chemists

Federal, state and municipal governments give employment to many persons trained in chemistry, according to the American Chemical society. The majority of these chemists are engaged in research, control and inspection.

Hospital System

Since the population of New York city is expected to reach a total of 10,800,000 by 1960, the hospital system must replace 24,300 beds and provide 25,500 new beds within the next 25 years.

U. S. High Buildings

There are said to be 400 buildings of 20 stories or more in the United States, half of them in New York city.

Outdoor Meals Require Balance

Even when dinner or supper is served outdoor style or at a picnic, the meal requires balance, suggest home economics staff members at Michigan State College.

Despite summer temperatures one of the easiest methods is to plan the picnic meal around some hot dish. A vacuum jug will keep food either hot or cold for hours. If the family has such a jug, prepare soup, stew, chili or other foods at home and serve hot at the picnic. If not, take a covered casserole of scalloped potatoes, tomatoes, or mixed vegetables that will hold its heat for an hour or so.

The fireplaces in local, state, and national parks make it easy to cook at the picnic grounds. One can prepare meat and vegetables at home, and then reheat them over the picnic fire. Canned foods can be heated quickly at the picnic or steaks or hamburgers can be broiled.

Raw vegetables as a relish or salad should be included in the picnic menu. If greens are crisped in the refrigerator they will stay quite fresh wrapped in waxed paper. Pack carrot or cucumber sticks, celery, radishes, or green onions into a covered glass jar.

For the beverage, plan to have milk for the children at least. If there is no way to keep the bottle cold, the milk will keep best in a vacuum bottle.

Fruit is ideal for the picnic dessert. Apples, bananas, grapes, plums, fresh pineapple, melons or other fruits, turnovers, or cup cakes also make good desserts for the outdoor meal.

Automobile mileage in America is terrific. The mileage figures for 1940 will probably be approximately 300 billion vehicle miles. For 1960, experts are predicting 500 billion miles. Think of the traffic problem this will create twenty years hence.

We must train drivers now. All schoos, at least high schools, should be prepared to teach young people the art of safe driving—not just driving. It becomes the responsibility of boards of education to provide safe driving courses for high school students so that they will not be confronted in years to come with a problem that is entirely unknown to them and so that they will be entirely familiar with correct ways to drive.

It's smart to drive carefully!

CEDAR RUN.

Mr. and Mrs. Albert Neiman and family, Mr. and Mrs. Orris Reid and family, and Mr. and Mrs. Stanley Hall and son of Detroit, and Mr. and Mrs. Barney Dolwick were visitors at the Bert Hendrick home Sunday.

Mr. and Mrs. Orson Hendrick, Jr., of St. Louis were week-end guests of their parents, Mr. and Mrs. Orson Hendrick, Sr.

Mr. and Mrs. Robert Kilburn were callers at the Theo Hendrick home Sunday.

Mr. and Mrs. Augusta Kronska and Mr. and Mrs. George Schuck of Ashmore were callers at the William Feagan home Saturday.

Miss Naomi Grace Wilson spent the week-end with her grandparents, Mr. and Mrs. Bert Southworth.

Mr. and Mrs. Roland Wilson spent the week-end at Grand Rapids and Muskegon.

How Many Good Ones?

It is estimated that there are 20,000 ways of earning a living and over 600 distinct vocations.

London's First Smoke Screen

The burning of coal was prohibited in London in 1306 because of the smoke it produced.

Farmers Buy 3,586,000 Trees

Trees enough to plant more than 3,000 acres of non-agricultural land were sold at cost this spring from the nursery operated by the forestry department of Michigan State College.

Another million trees or enough for another 1,000 acres for reforesting were sold by the Michigan State Conservation Department.

In Tuscola County the tree orders filled by the college numbered eight for a total of 19,410 trees.

Three principal uses are being filled by farmers utilizing these seedlings, says W. Ira Bull, extension forester at the college.

Wind and water erosion control is one purpose. The others include eventual timber or pulpwood production on non-agricultural land, use as windbreaks, and for an ultimate Christmas tree crop.

Special allotment of as much as $30 a farm, earned by planting forest trees on farms, at the rate of $7.50 an acre, was an inducement this year from the federal Agricultural Soil Conservation program. This, says Forester Bull, had some effect in boosting the recent planting to a 2,000,000 tree increase over the number of seedlings sold from the college nursery a year ago.

Some of the leading counties in the 3,586,000 total of trees purchased were Muskegon with 701,000 seedlings, Oceana with 260,000, Mecosta, 185,780, and VanBuren, with 140,000.

Price lists for reforestation stock to be sold this fall and next spring will be available about August 1. Landowners seeking supplies are advised to write to the forestry department at the college for cost price lists and to place their orders early in the fall before supplies of some of the species are exhausted.

Hind Legs First?

Hind feet of animals that bound, including the rabbit, track ahead of the front feet.

Watch the Big Numbers

In dice games, why do the large numbers seem to show up more frequently than the small? The numbers are made by cutting holes in the dice faces and the large-number faces therefore have less weight and are most likely to roll to the top when the dice are thrown.

British Broadcasting

The government-sponsored British Broadcasting corporation now radiocasts daily news bulletins in Afrikaans, Arabic, Czech, English, French, Gaelic, German, Greek, Italian, Magyar, Polish, Portuguese, Rumanian, Serbo-Croat, Spanish, Turkish and Welsh.

Red Crown 2 to 1* choice!

Midwestern gasoline favorite holds double lead over "runner-up"

When one brand of gasoline leaves more than 100 others trailing . . . Man, that's news! ★ It tells you just one thing about that gasoline: It must be good! That's not surprising, either. Take Red Crown's famous high-strung power, plus its low cost per mile, and combine those qualities with its high anti-knock, and you'll see why Red Crown is mid-western champion for sweet-riding thrifty performance. ★ Try a tankful today.

*Based on latest available state tax and inspection data.

STANDARD OIL MAKES 3 FINE GASOLINES PRICED TO SUIT YOUR PURSE
Red Crown regular-priced. Solite premium quality. Stanolind bargain-priced.
Enjoy a national credit card! Apply to any Standard Oil dealer
© 1940
STANDARD SERVICE
STANDARD OIL DEALERS

McGrath's Standard Service
EAST MAIN STREET, CASS CITY

SAVE TIME MONEY EFFORT
WITH THIS AMAZING NEW **Hotpoint** ELECTRIC RANGE WITH *Measured Heat*

Come in and see this remarkable range value.
The beautiful new **ARISTOCRAT MODEL** *uses the truly modern fuel—electricity.*

NEW FEATURES BRING ADDED CONVENIENCE
1 All purpose automatic oven with 5 measured heats and interior light.
2 Three Select-a-Heat Calrod units with 5 measured heats.
3 Five-Speed Thrift Cooker.
4 One piece top of stain-resistant enamel.
5 All porcelain enamel inside and out.

HOTPOINT'S NEW CALROD IS FASTER, MORE EFFICIENT, MORE DURABLE THAN EVER
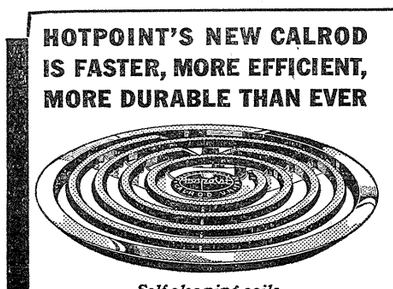
Self cleaning coils

New removable reflector

Can be washed like a pie tin
THE NEW CALROD OPERATES ON LESS CURRENT THEN EVER

WHAT *Measured Heat* DOES FOR YOU
1 Simplifies cooking. Makes fair cooks good and good cooks better.
2 Saves current. Saves time. Saves money. Saves effort. Saves nerves.
3 Ends guesswork. Assures perfect results every time.

Cass City Oil and Gas Co.
STANLEY ASHER, Manager Telephone 25

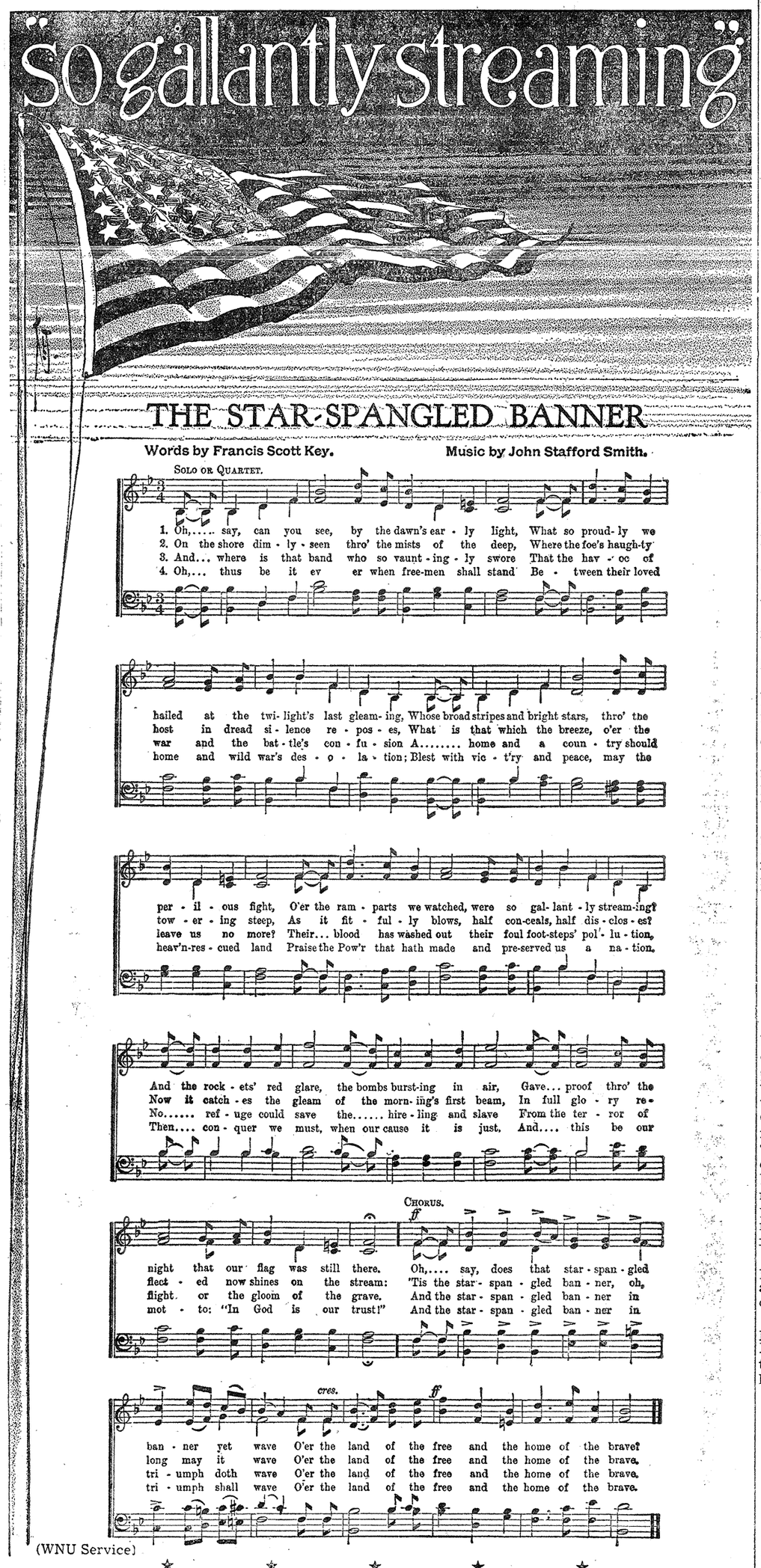

THE STAR-SPANGLED BANNER

Words by Francis Scott Key. **Music by John Stafford Smith.**

(WNU Service)

★ ★ ★ ★ ★

How well do you know "The Star Spangled Banner," America's national anthem? Here before you is your opportunity to memorize the thrilling words, to sing the inspiring song, and to play its music. What day more fit than on Independence day to get better acquainted with the deep, inspiring Americanism Francis Scott Key put into his masterpiece as "O'er the ramparts" he watched and saw the flag still proudly waving.

★ ★ ★ ★ ★

TODAY, as from the very foundation of our nation, Liberty is the American ideal, come down to us these many years purified by the blood of martyrs.

It is this great doctrine of Liberty which distinguishes Americans from any who have not had our long tradition of political and human freedom. And were it preached by tongue most eloquent, the philosophy of repression and oppression, of class against class, of creed against creed, and of human thralldom to a dictatorship, shall ever remain alien under the Stars and Stripes.

Never shall Americans exchange Liberty and Democracy for the slavery of authoritarian ideology.

"O'er the ramparts we watch," wrote Francis Scott Key.

"O'er the ramparts we watch" today, too. And as long as we hold to the American ideals of freedom, we shall continue to see our flag "so gallantly streaming."

HOLBROOK.

Mr. and Mrs. James Jackson of Wahjamega were guests of Mr. and Mrs. William Lewis Tuesday.

Mr. and Mrs. Nelin Richardson and son, Lyle, of Ubly were guests of Mr. and Mrs. Clifford Jackson Sunday.

A large crowd attended the dance Friday evening given by Mr. and Mrs. Verde Pierce in their new barn. All report having a good time.

Mr. and Mrs. Leonard Ballentine and son, Jimmie, visited relatives here the past week and returned to their home in Port Huron Sunday. Albert Price went with them and will visit his daughter, Mrs. Russell Sills, for some time.

Mr. and Mrs. William I. Moore and the Souden twins of Cass City and Mr. and Mrs. Pete Rienstra of Argyle were dinner guests of Mr. and Mrs. Loren Trathen Sunday. Myrtle Lorene Souden is spending a few days with her cousin, Mrs. Rienstra.

Those attending the Caverly reunion at Kingston Sunday were James Hewitt and grandson, John H., Mr. and Mrs. Leslie Hewitt and son, James, and Mr. and Mrs. Don Becker and son, Robert. The oldest one present was Redford Caverly, who passed his 100th birthday in March. The youngest one present was Robert Becker, 4 months old.

PLEASANT HOME HOSPITAL.

Patients who were taken home during the week include: Mrs. Olive Hess and Mrs. Martin Murphy, Caro; Frank Bullock and Mrs. Fred Brown, Snover; Mrs. Edwin Fulcher and baby, Argyle; Miss Leah Meyer, Sebewaing; Mrs. Colling, Unionville; Mrs. Donald Duford and Mrs. Margaret Bridges, Cass City.

Patients admitted during the week and still in the hospital are Mrs. Eli Patterson, Tyre; John Kennedy and Miss Mildred Clara, Gagetown; Harvey Klinkman and Mrs. George Holshoe, Cass City; Mrs. Russell Erb, Bad Axe; Mrs. Stanley Mitchell, Deckerville; Mrs. Basil Heemer, Sandusky.

Tonsillectomy operations were performed on the following: Rev. Mr. Rolland and son, Tommy, Williamsburg; Miss Verda Zuschnitt, Cass City.

Born to Mr. and Mrs. Judson Bigelow of Akron on June 18, a son. Mother and baby are still in the hospital.

Mrs. George Viet and Ray Lashaway of Kingston are still patients in the hospital.

MARRIAGE LICENSES.

Stanley Lewiski, 24, Silverwood; Mary Blackmer, 18, Clifford.

Frank Bushong, 21, Cass City; Edna Whale, 20, Decker.

John Rozenstagel, Jr., 23, Unionville; Mabel Sarow, 18, Unionville.

Jack McKellar, 21, Caro; Margaret Nagy, 20, Caro.

Richard Avery, 21, Caro; Lucille Birk, 17, Unionville.

Egyptian Eyes

The ancient Egyptians regarded women's eyes as their principal beauty asset. A homely woman with large, soulful eyes was considered beautiful. A pretty girl with unattractive eyes had to have a fat dowry to arouse attention of suitors, according to the Better Vision Institute.

Annual Sheep Dipping Program Underway in County

Hundreds of the 15,000 sheep in Tuscola County are being dipped each week for control of external parasites during the months of June and July, Norris W. Wilber, county agricultural agent, announced this week.

Several stationary concrete vats are available to county sheepmen and a modern portable dipping outfit is also at work in this county at the present time. Two men operate the outfit and can handle about 1,000 sheep per day.

Sheep should be drenched for internal parasites just previous to the dipping operation. All sheep and lambs should be dipped annually. Here are suggestions from the county agent:

When-to-Dip: Annually, 1 to 2 months after shearing is best. Enough wool should be present to retain powder in dipping solution.

What-to-Use: Michigan sheepmen prefer arsenical powder dips as only one dipping is necessary yearly. Eggs which hatch are killed by powder retained in wool.

Equipment: Special tanks or vats built for this purpose are best. Concrete vats are durable, convenient, and economical.

Procedure: Dip ewes first. Hold in solution until wool is thoroughly soaked. Duck heads by placing hand over nose and mouth.

Cost Low: Based on number treated. From 1 to 2 cents per head for material when 500 to 1,000 are treated; this includes drenching.

Drench your flock once each month. For best results use copper sulphate-nicotine sulphate treatment.

Important: Rotate pastures and supply the flock with fresh water. Plans for concrete vats and information on dipping and drenching may be secured from Norris W. Wilber.

Ag Man Tells Spray to Use in Battling Tent Caterpillars

"Tent caterpillars are usually bad one year out of three, and if one may judge by the number of calls I have received from people who want to do away with them, this is the 'bad' year," said Willis Campbell, agricultural instructor in the high school in Cass City. "Tent caterpillars are destroyed quite extensively in the so-called bad years by parasites and the next two seasons the caterpillars probably will be here in lesser numbers. They find their best feeding on trees."

The best poisons for tent caterpillars, according to Mr. Campbell, are arsenic of lead, or paris green, or any good poison stomach spray.

For those who are interested in pruning spirea (bridal wreath), Mr. Campbell recommends the time immediately after the bush has finished blossoming.

College Bequests

Women's colleges suffered more than men's colleges from lack of bequests and gifts during depression years.

Worry as Fear

Worry is said to be a form of fear; to overcome it, search for and remove its cause.

State Gasoline Taxes

State gasoline taxes range from two to seven cents.

"GUESS AGAIN" ANSWERS

Tally Score Here

1. (d) scores 15 pts. . . . . ____
2. (b) is worth 15 more . . . ____
3. (b) again for 10 pts. . . . ____
4. Shades of No. 1—(a), 15 pts. ____
5. If you guessed true—20 pts. ____
6. (c) for 15 pts. . . . . ____
7. (c) again for 10 pts. . . . ____

YOUR RATING: 90-100, excellent; 80-85, superior; 70-75, average; 60 and below, you missed the boat. **TOTAL** ____

MOBILGAS

gives performance second to none.

Wright & Murphy

Cass City **Telephone 75**

KEPPEN APPOINTS ROTARY GROUPS FOR COMING YEAR

Concluded from first page.

president, Fred A. Bigelow; secretary, William Miller; treasurer, A. C. Atwell.

Members of the board of directors are F. A. Bigelow, A. C. Atwell, William Miller, G. W. Landon, H. Doerr, W. L. Mann, Frank Reid, Robert Keppen.

B. H. McComb, county commissioner of schools, was the speaker at the Rotary Club luncheon Tuesday. He placed his audience in good humor by telling some of the queer answers to questions given in the recent eighth grade examinations, and then placed his listeners in a more serious mood by relating the remarkable intelligence exhibited by several who participated in the examination. Mr. McComb explained the three outstanding problems of education today—the unequal financial loads of school districts of the state, the qualifications of instructors and character training through the schools. In his remarks, he stressed the fine work of the county normal in its one-year course in preparing students to teach in rural schools.

Mr. McComb's address was most instructive and he held the close attention of the club members.

J. Ivan Niergarth served as song leader and Charles Keen, music instructor in the local schools for the coming year, was piano accompanist.

YOUTH START SUMMER FUN AT MUNICIPAL PARK

Concluded from page one.

The water in this pool is circulated, filtered and chlorinated continuously while the pool is in operation. Samples of the water are regularly submitted to the Michigan State Department of Health for testing purposes.

Arthur Holmberg, who managed the pool last summer, is again in charge, and Don Kilbourn, who served as life guard at the pool last season, is now on duty.

Later in the summer, probably starting next month, it is planned to have one evening a week devoted to swimming races and other water stunts. Such a program was inaugurated last year and attracted large audiences.

Two articles will be acceptable as gifts if presented for use at the pool. One is an old-fashioned wringer for removing water from bathing suits and the other is a radio. More particulars are available from Mr. Holmberg.

Largest Mammoth Tusk

The American Museum of Natural History says the largest mammoth tusk discovered in the United States was one found by George Doughty of Post, Texas. It is 16½ feet long and 2 feet in circumference. Doughty found it in sandy soil near his home.

Agriculture's Variety

More than 100 separate commodities are embraced in the industry generally referred to as agriculture.

23 TEACHERS FOR LOCAL SCHOOL SIGN CONTRACTS

Concluded from page one.

receive his master's degree at the University of Michigan in August of next year. He is in Cass City to serve as instructor of the band this summer.

Miss Cotton, who graduated with honors in English from Wheaton College at Wheaton, Illinois, this spring, with an A. B. degree, will teach English 10 and Latin. Her home is in Volga, S. D.

Miss Wallingford of Fort Mitchell, Kentucky, graduated in June from Western College at Oxford, Ohio. In her senior year, she was elected to the presidency of the College Government Association, the highest student office.

Mr. Ackerman is an A. B. graduate from Central State Teachers' College and has had 10 years' experience in teaching 6th, 7th and 8th grade pupils in the Fairgrove and Chesaning schools.

Miss Garety of Cass City is also a graduate of Central State Teachers' College and holds a life certificate. She has taught for 11 years in the rural schools of Huron County.

Miss Clara has taught for a number of years in the primary department of the Pontiac schools. Her home is in Gagetown and she received a life certificate after completing her studies from Central State Teachers' College.

STRAND

Thumb's Wonder Theatre!
CARO **Phone 377**

Mechanically Air Conditioned!

Fri.-Sat. June 21-22
Direct from its world premier!
"THE GHOST BREAKERS"
with Bob Hope and Paulette Goddard
Giant Cash Night Friday!
$285.00 FREE!

Midnight Show Saturday and Sun.-Mon. June 23-24
Continuous Sunday from 3:00
Thumb Premier!
See inside Nazi Germany!
James Stewart, Margaret Sullavan, Robert Young and Frank Morgan in
"THE MORTAL STORM"
No advance in admissions
COME EARLY!

Tues.-Wed.-Thur. June 25-26-27
Exclusive Showing!
DON AMECHE and MARY BETH HUGHES in
"FOUR SONS"
Don't miss this timely picture!

TEMPLE

Fri.-Sat.-Sun. June 21-22-23
Two Hits—Thumb Premiers!
The Jones Family in
"ON THEIR OWN"
and George O'Brien in
"PRAIRIE LAW"
$285.00 FREE FRIDAY!

Cass

"Pride of the Thumb"
Air Conditioned to Your Comfort!
Luxury! Comfort! Beauty!

Fri.-Sat. June 21-22
Friday is Bank Night!
Smash Twin Bill!
Thumb Premier!
It's positively packed with thrills galore!
"The Ghost Breakers"
starring Bob Hope and Paulette Goddard
and Roy Rogers and George "Gabby" Hayes in
"Days of Jesse James"
A story of the most famous outlaw that ever roamed the pioneer West!

Sat. Midnite - Sun. Matinee
Special Guest Feature!

Sun.-Mon. June 23-24
Cont. Sunday from 3:00
Thumb Premier!
One of the greatest dramas ever to reach the silver screen!
James Stewart and Margaret Sullivan in
"The Mortal Storm"
with Robert Young

Tuesday Only June 25
Giant Bank Nite Prize!
Edgar Bergen and "Charlie McCarthy" in
'Charlie McCarthy Detective'
It's filled with real laughs!

Wed.-Thurs. June 26-27
The biggest double bill ever shown in any theatre!
Wallace Beery in
"Man from Dakota"
— and —
"Shop Around the Corner"
with James Stewart and Margaret Sullivan

FOR PERMANENT CONSTRUCTION

— Use —

Washed Sand, Gravel and Plastering Sand

For inexpensive garages, houses, house and barn walls, etc., use

Concrete Block and Concrete Brick

We are now using Medeusa Waterproof Cement for block and brick which greatly decreases water absorption in this type of building material. This cement is more expensive but gives more desirable products.

We also have a stock of concrete chimney blocks for sale. A chimney can be built in a day.

INVESTIGATE OUR LOCALLY MADE MATERIAL BEFORE BUILDING.

Cass City Sand and Gravel Co.